lieber.logisch.lagern

SCHULTE Lagertechnik

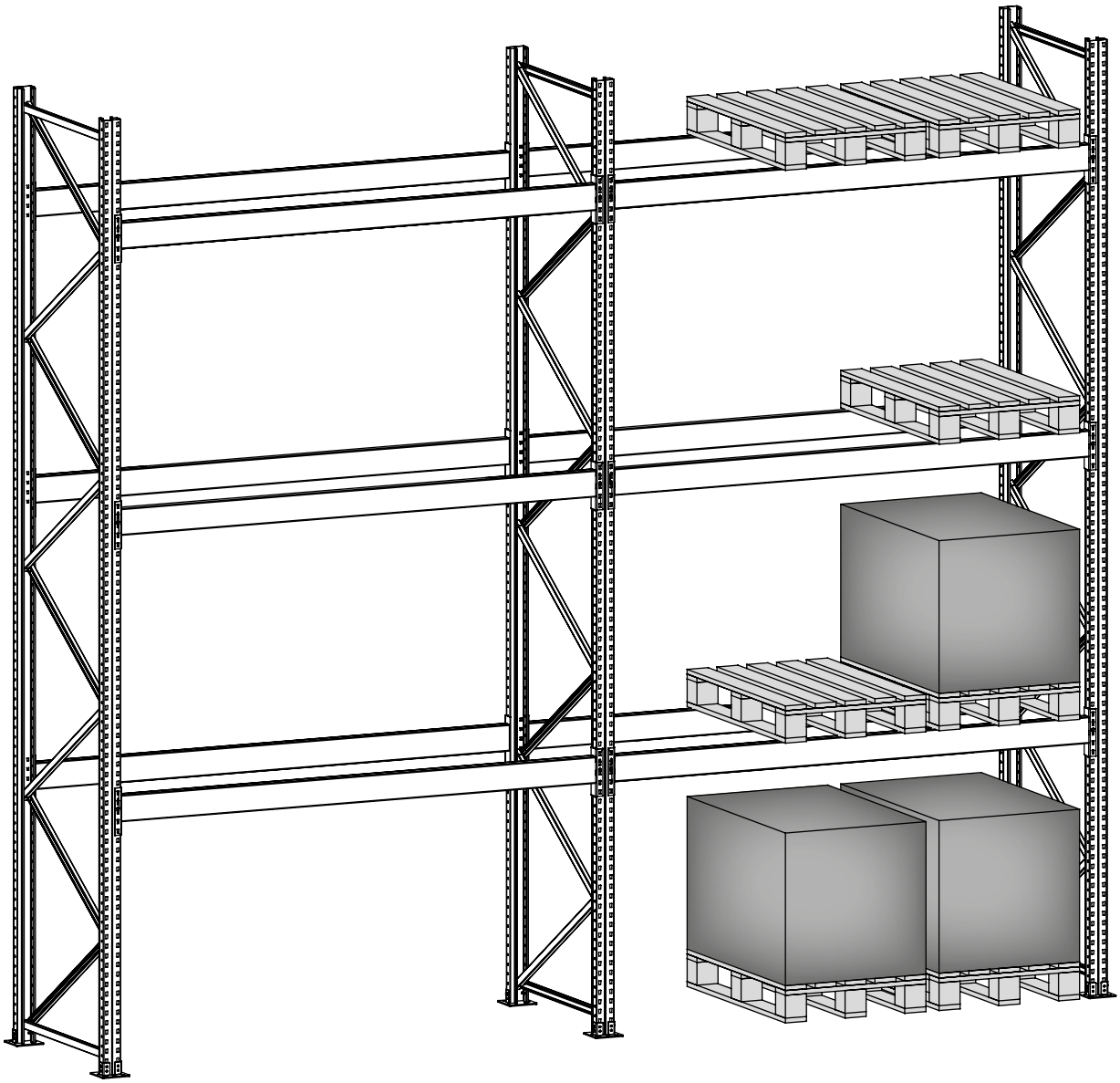

Art. No. 13048-EN

Pallet racking

Assembly and usage instructions

Dear customer,

Thank you for choosing a SCHULTE Lagertechnik product.

Our pallet racking systems meet the requirements of design, calculation, inspection, testing and production systems according to the European legislation for: steel static storage systems
- Adjustable pallet racking systems
- Principles for structural design; German version DIN EN 15512:2009.

With this standard we also fulfil the German national deviation standards.

It is essential to observe the instructions in these assembly and usage instructions. According to legal regulations, you as the operator of the system are obliged to affix the type and load plates supplied, as well as these assembly and usage instructions, to clearly visible positions on the shelving!

The specified frame load capacity is valid for the specified buckling length. When changing the suspension heights of the beams (buckling length), the tables in these instructions apply.

Warranty and guarantee claims are only valid if the shelving is installed correctly according to the installation instructions.

Your SCHULTE Lagertechnik team

Content

Important notice:

CAUTION: Make sure that the window holes are in the correct position **when starting assembly!**

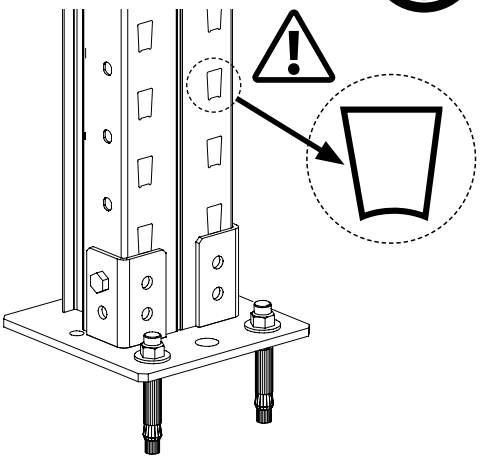

GENERAL INSTRUCTIONS

Information regarding legal regulations in these assembly and operating instructions is only valid for Germany.

For installation in European or international countries or territories, the local, legal regulations or conditions apply. Please contact your local authorities for further information.

These assembly instructions have been produced with great care. Nevertheless, errors can still occur. For this reason, no legal or any other liability can be accepted for missing or incorrect information and its consequences.

Necessary changes to the assembly instructions can be made by us without prior notice. This document may only be reproduced by the manufacturer.

The following standards and guidelines must be observed: DGUV 108-007

Before starting assembly, please read through these assembly instructions and observe the instructions contained.
Before setting up your shelving system, please make sure you read the information and instructions contained in this document. Please adhere closely to the information in these instructions and the notes in our order documents when setting up the system and during subsequent use. Please contact Gebrüder Schulte GmbH & Co. KG for any queries.

Liability and warranty
The manufacturer is not responsible for any personal injury or damage to property resulting from improper use, rather the operator of the shelving system is responsible.

The shelving components we supply may only be used for their intended purpose. Our "General terms and Conditions" apply. Warranty and liability claims for personal injury and damage to property resulting from improper use, operation, dismantling or assembly, repairs or from external influences are excluded. All information in this document refers only to shelving units for indoor installation. In other cases, please contact us.

ASSEMBLY INSTRUCTIONS

Assembly must be carried out by qualified personnel (at least 2 persons) with the appropriate tools. Brute force must not be used when assembling the components. Assembly must be carried out according to the following instructions. Exceptions are only permitted if in individual cases our accompanying documents require a different assembly. Any discrepancies must be agreed with our technical personnel.

The valid regulations of the German employers' liability insurance association must be observed. See DGUV 108-007.

The permissible loads of the shelving must not be exceeded. The load can be identified by the accompanying documents. The specifications apply for evenly distributed static load. For bay load, see tables (see technical appendix).

REQUIREMENTS FOR ASSEMBLY

1. Prerequisites
A shelving row consists of at least 3 bays next to each other. Each bay is fitted with at least 2 beam pairs. The shelf heights are approximately the same on all levels (deviation of heights of upper shelves compared to height of lower shelf max. +/-10 %). If a shelving row does not meet this requirement, this results in lower load values, see page 15.

2. Frame load capacity
The frame load capacity depends on the buckling length (distance from the floor to the first upright, see page 14), the upright type and the beam type. For load data, see page 15. Additional values on request.

3. Beam type
Box hollow profiles are used as standard (see page 16). Other beam types on request.

4. Preventing stored goods from falling down
According to DGUV 108-007, the sides not intended for loading and unloading must be secured against load units falling down. When storing pallets, the safeguards against falling load units must be at least 500 mm higher than the top storage level, even for the uppermost shelves.

5. Passageways
Traffic routes in racking installations must be at least 1,250 mm wide, side aisles at least 750 mm wide. The safety distance to conveyors must be at least 500 mm on each side.
Passages or passageways, e.g. for forklift trucks, must be secured to prevent loads from falling down (e.g. by a particle board on the beam). The clear height must be at least vehicle height +250 mm, but must not be less than 2,000 mm.

6. Collision protection
In order to protect corner areas and passageways, collision protection marked in yellow and black with a height of at least 400 mm is required in accordance with DGUV 108-007.

7. Transverse storage of pallets
Transverse stacking without longitudinal supports is not permitted. (Exception: e.g. for programmed stacking).

8. Push-through safeguards
For double shelving, push-through safeguards are required if a safety distance of at least 100 mm between the pallets is not maintained. Push-through safeguards must be effective at least up to a height of 150 mm.

9. Safety distances
Determine the exact location of the shelving on the hall floor with a tape measure and chalk. Particular attention must be paid to the required safety distance from the wall and to DGUV 108-007. For the wall distance, the pallet projection must also be taken into account (e.g.: pallet overhang 50 mm + 100 mm safety distance = distance to wall = 150 mm).

10. Condition of the base plate
The base plate must absorb the compressive, tensile and thrust loads from the shelving. Minimum structural thickness of the floor plate 200 mm and minimum hole depth 150 mm, unless the loads and/or the anchorages require greater thicknesses/depths. The evenness of the floor must be ensured for RFZ systems according to FEM 9.831 or for conventional shelving systems, drive-through racking systems etc. according to DIN 18.202. Please observe minimum concrete quality C 20/25 (not containing magnesite) with corresponding proof.

Any earthquake or fire protection measures that may be required are not taken into account. The building regulations must be checked by the client or operator.

USAGE

The specified uniform load per shelf and bay (see type plate) must not be exceeded. Make sure that the beams are only adjusted when they are unloaded. Changing the heights, especially of the lowest shelf, changes the permissible load capacity of the uprights. After assembling or converting shelves, the supplied locking pins must be inserted properly. Make sure that only the original safety pins are used.

The pallets or loads must be stacked in the racking in such a way that the displacement of the centre of gravity of the load in relation to the centre of the racking in the depth direction is not more than 50 mm. Make sure that the loads are properly supported on the beams. Pallets or loads in racking systems must not be pushed over the beams or placed on them with impact. The racking must not be approached with the load or the forklift truck. If a shelving component has been visibly deformed as a result of improper operation, it must be replaced immediately.

The operator must use forklifts with suitable fork lengths to stack pallets.

Use only pallets that are in perfect condition and meet the quality requirements of the pallet manufacturer.

The pallets may only be used in the manner intended by the manufacturer. The uniformly distributed load permissible for the intended use must not be exceeded.

Any modifications to the system must be agreed with us in advance. Conversion of existing shelving may only be carried out by suitable and trained personnel. Conversion work may only be carried out in an unloaded state. When rebuilding / reassembling the system, proceed according to the regulations and information in this manual!

If shelving heights or the shelving arrangement are changed, check the validity of the existing load stickers. If the stickers no longer correspond to the valid loads, up-to-date stickers with the corresponding load specifications must be ordered from us in order to meet the requirements of the German employers' liability insurance associations and the relevant standards.

SHELVING INSPECTIONS

The controls are based on the new European standard EN 15635 ("Guidelines for safe working"). This defines the procedure for inspections of storage facilities/shelving systems.

Visual inspections
The safety officer must ensure that inspections are carried out at regular intervals, usually weekly, or at other intervals based on a risk analysis. A formal written report must be recorded and stored.

Expert inspections
"Inspections must be carried out by a competent person at intervals of no more than 12 months. A written report must be submitted to the Safety Officer with observations and proposals for any necessary action."
(Extract from DIN EN 15635)

Expert inspection by a competent person from SCHULTE Lagertechnik
The expert inspection must be carried out by a competent person (e.g. trained shelving inspector from SCHULTE Lagertechnik) who knows the relevant laws and regulations on site. Specialist knowledge of storage equipment and shelving is also required.

Observe safety regulations!

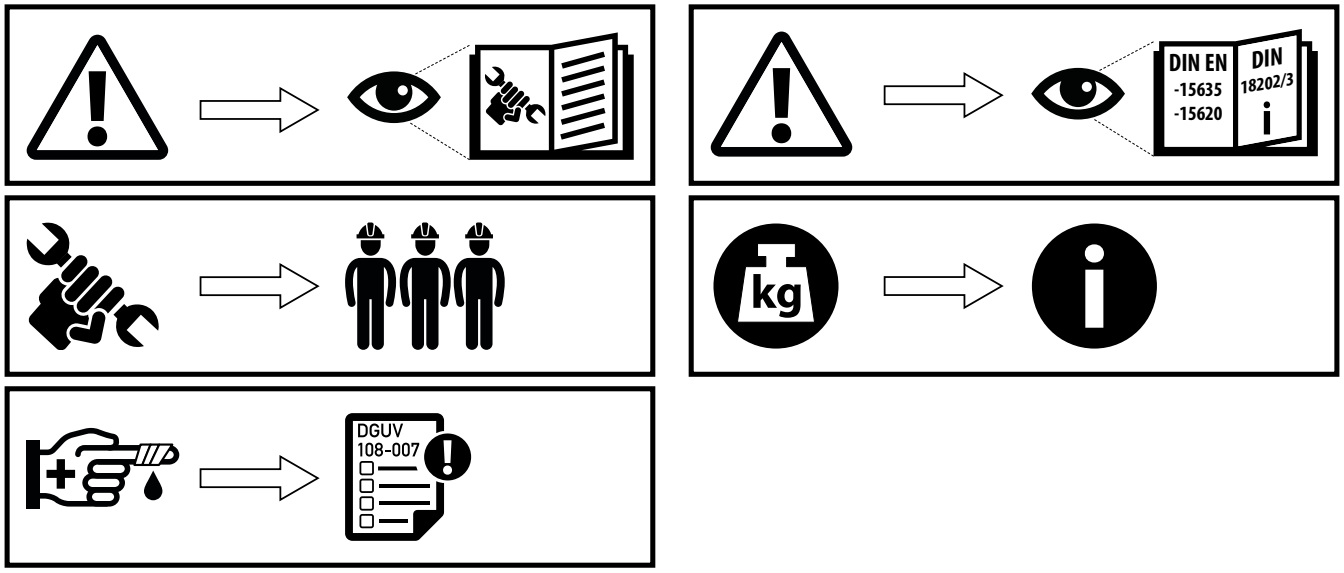

Observe safety measures during assembly!

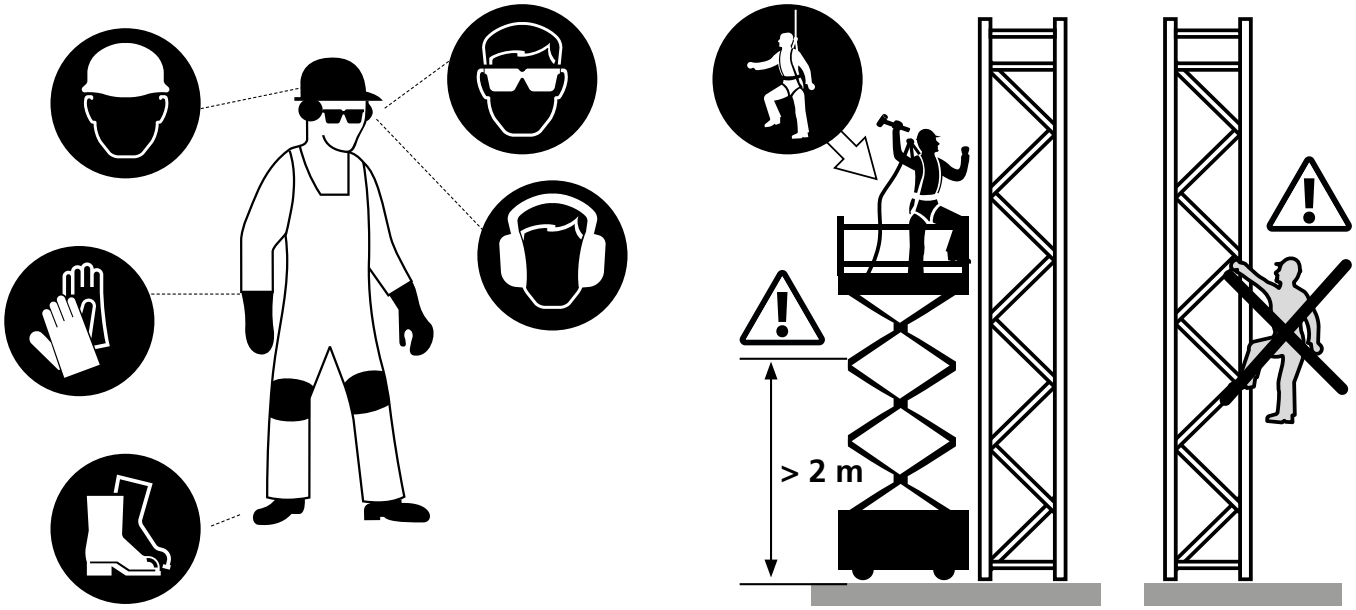

Tools required for assembly

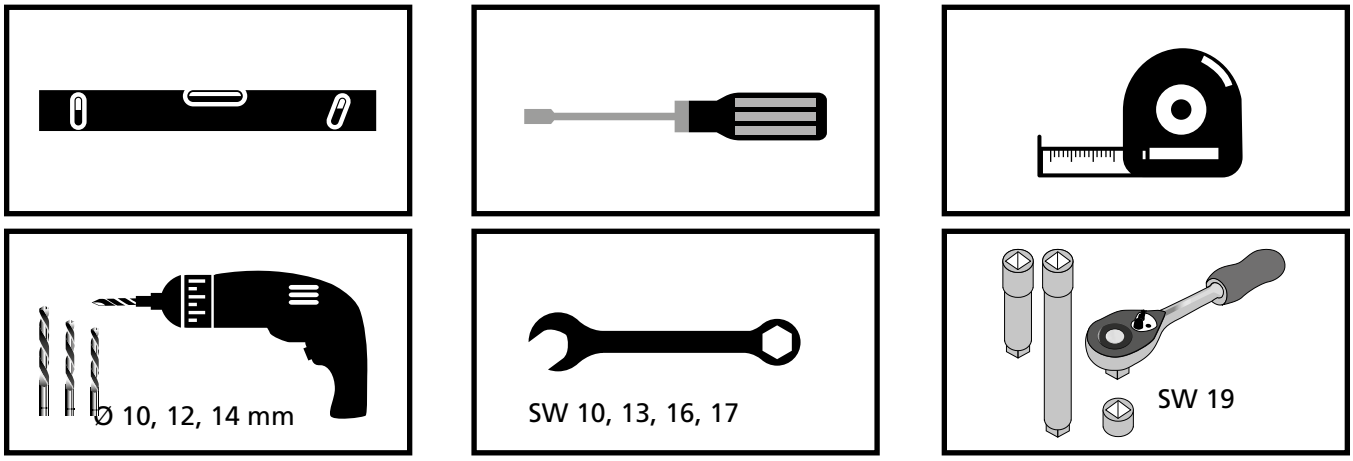

Anchoring requirements

Anchoring information

In general, the anchoring requirements issued by the respective anchor manufacturers apply.
The anchors must be installed in accordance with the respective manufacturer's installation instructions.
Corresponding information and instructions are enclosed with the fixing elements. If you have any questions, please contact SCHULTE Lagertechnik.

Anchor installations may only be carried out by trained personnel.

IMPORTANT NOTE:

GROUND ANCHOR

Please note that our pallet racking systems may be fixed
with ground anchors M12 x 110 mm Article No. 46699 in galvanised,
or in stainless steel Article No. 16113-V4A.

The requirements for the base plate can be found on page 3, item 10.
In case of deviations, please consult SCHULTE Lagertechnik.

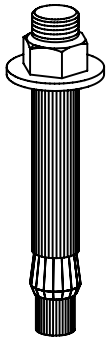

Type ground anchor

BOLT ANCHOR

Corner crash protection and wall crash protection may be fixed with bolt anchors
Ø 10 x 90 mm in galvanised, Article No. 16557 or equivalent.

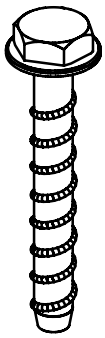

Type bolt anchor

**Mixing the anchor types is not permitted, if this is
done, the corresponding approvals and any warranty claims will expire.**

Vertical installation

Align the shelf plumb and vertical within the prescribed tolerances. Compensate for height differences of the floor by shimming with bearing plates.

Please note the maximum number of 5 bearing plates or maximum height of 10 mm. For more information, please contact SCHULTE Lagertechnik.

The deviation from the vertical must not exceed H/350 of the shelf height in longitudinal and transverse direction.

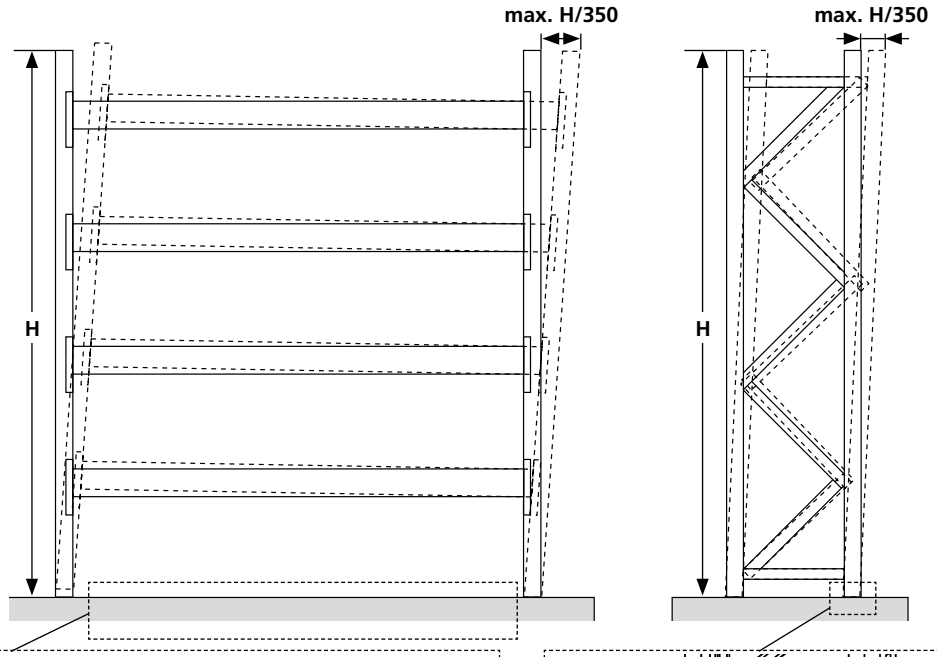

Floor level tolerances DIN 18202

L m	X mm
< 1.0	max. 4
> 1.0 - 4.0	max. 10
> 4.0 - 10.0	max. 12
> 10.0 - 15.0	max. 15

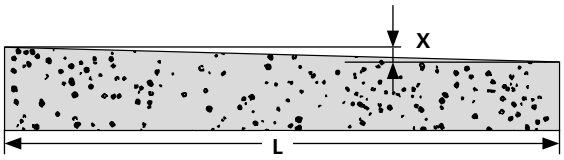

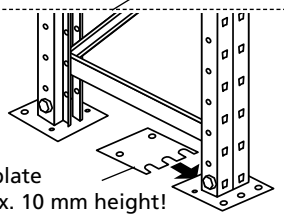

Bowing of the beams

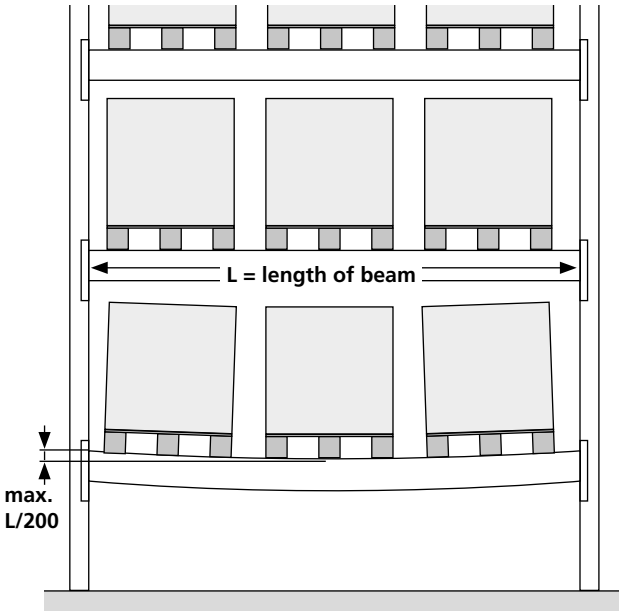

The maximum vertical bowing of a beam is the length divided by 200!

EXAMPLE: For a beam length of 2,700 mm the max. bowing is 13.5 mm (2,700: 200 = 13.5).

Ground anchoring

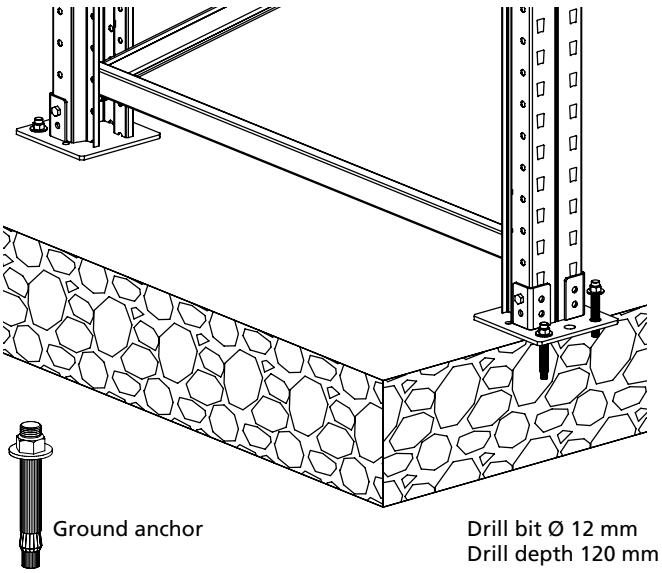

Ground anchoring is always necessary. Use 2 ground anchors for each base plate. Drill the holes through the base plate into the ground, insert the anchor and tighten. The anchors must grip in the concrete.

The requirements for the base plate can be found on page 3, item 10.

Storage and spacing of pallets

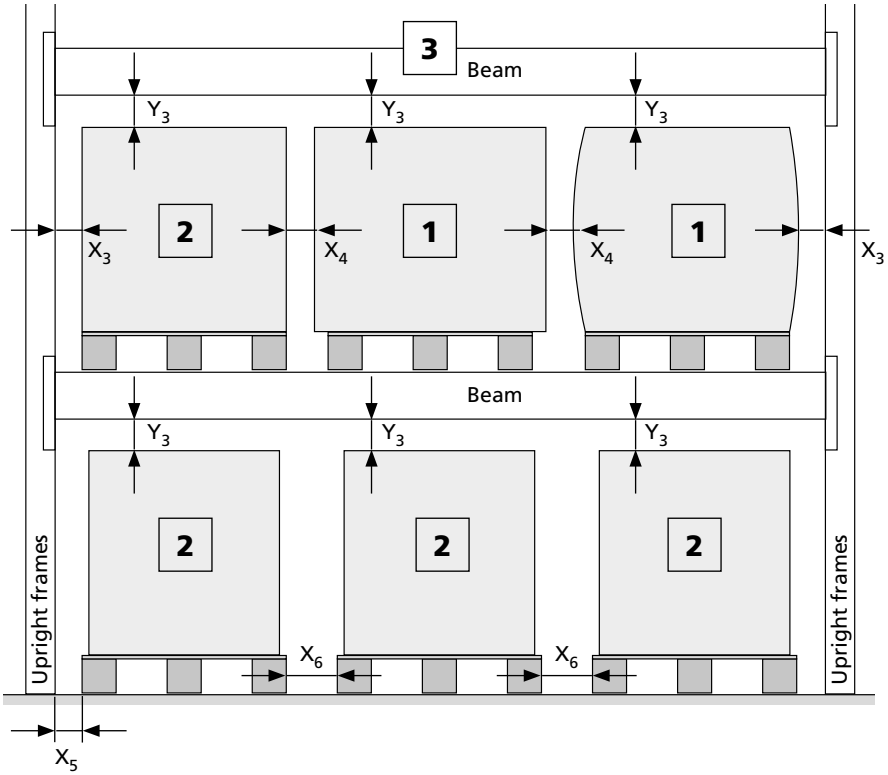

Horizontal and vertical clearances for forklifts

Height of the beam from the ground in a height of mm mm	X_3, X_4, X_5, X_6 mm	Y_3 mm
0-3,000	75	75
3,001-6,000	75	100
6,001-9,000	75	125
9,001 - 13,000	100	150

The horizontal and vertical clearances must not be less than the values shown in the picture and the table.

In high risk environments defined by the designer, greater clearances may be required to maintain safe working conditions.

Legend

1 Pallet with load overhang
2 Pallet without load overhang
3 Beam without bowing
(Maximum vertical bowing of a beam: length/200)

Maximum overhang of pallets

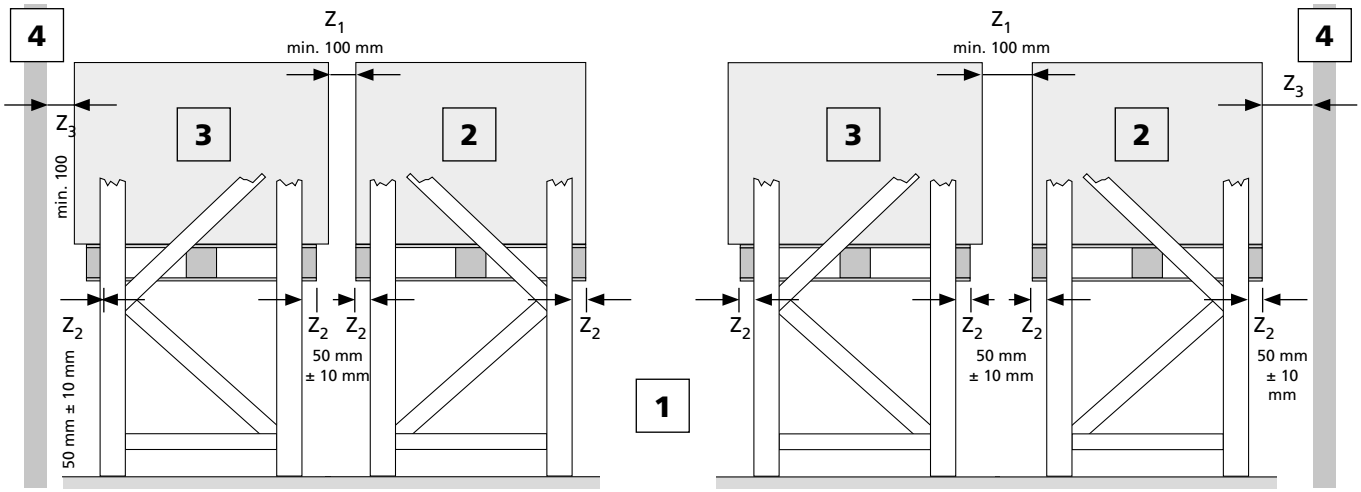

Legend

Z_1 Distance between goods and goods
Z_2 Distance from pallet to upright frame
Z_3 Distance between goods and panel, push-through safeguard or locking reinforcement (min. 100 mm)

1 Aisle between pallet racking
2 Pallet without load overhang
3 Pallet with load overhang
4 Wall, push-through safeguard locking reinforcement behind the load units

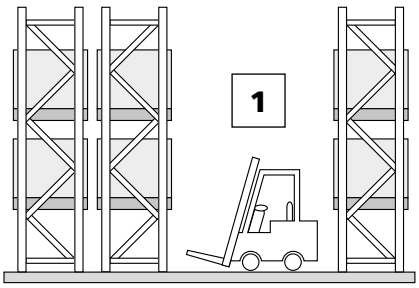

1 Aisle widths

The aisles between the racking systems must be sufficiently wide. The forklift truck must be able to drive along and make a 90° turn to perform storage and unloading.

Please refer to the data sheet of the forklift truck used for the required aisle widths.

Rack loading & storage

Rack loading and storage sequence

The pallet racking **must** be loaded evenly in sequence from bottom to top (see Fig.). This must be done by trained storage personnel with suitable lifting equipment!

NOTE: Any existing push-through safeguards must not be intentionally used for positioning or as a stop for pallets in the racking!

Only use undamaged pallets; defective loading aids may no longer be able to absorb the loads from the goods and break.

The lifting device must always have a fork length that covers the entire length of the pallet. Shorter forks are not permitted!

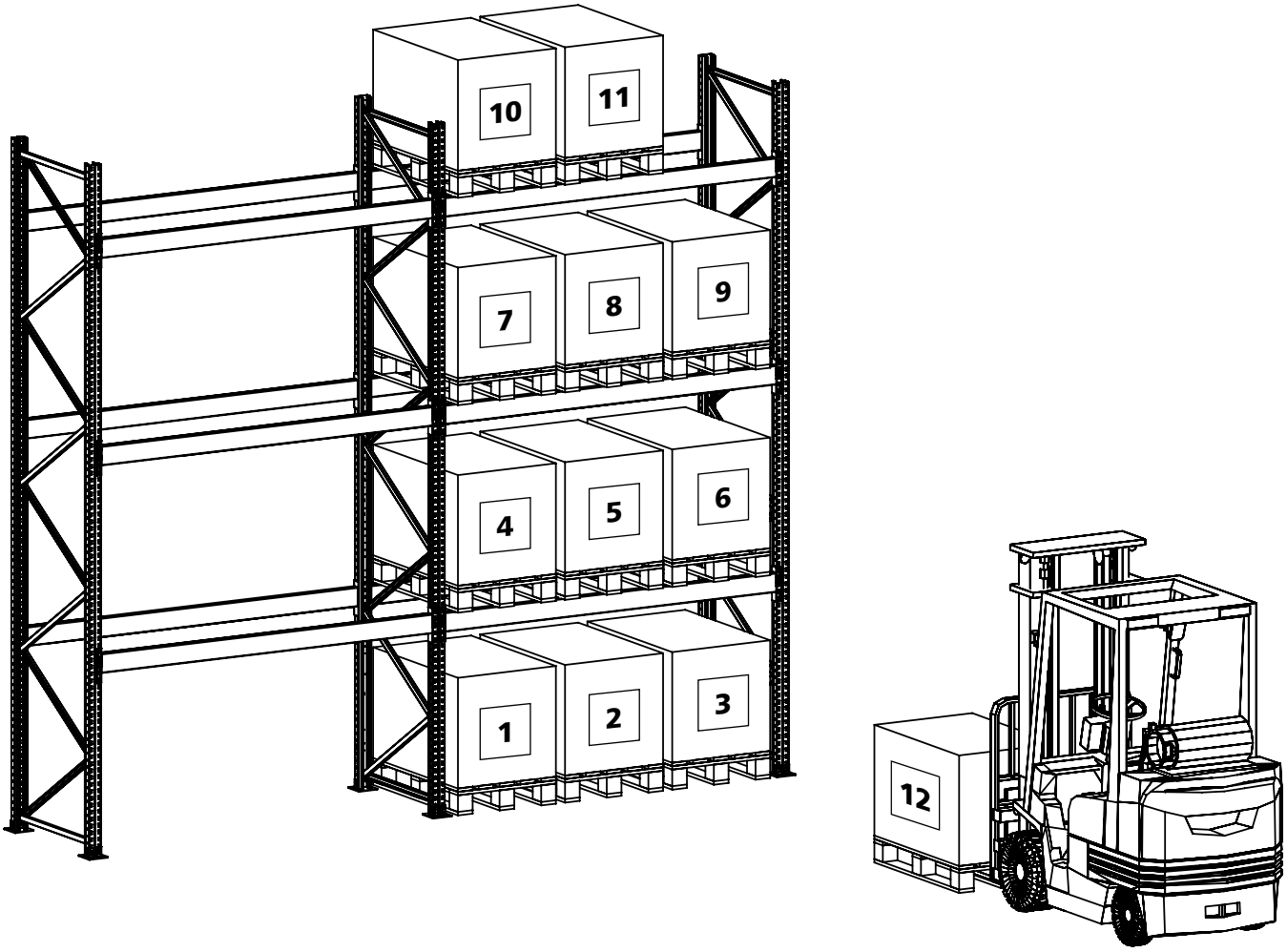

According to DGVU regulation 208-021

Point 1.12:

Goods must be stored in the racks in such a way that the distance to the moving rack operating device and its load specified for the system is maintained.

(This means, among other things, that rack operating devices must not hit or damage the racking structures!)

Use of the storage equipment according to DIN EN 15636 Annex E, instructions for use

Storage in pallet racking systems with loads that are not evenly distributed:

NOT PERMITTED!

General

Loading and unloading of loading aids should be carried out with care. No additional forces or impact loads should be added to the forces exerted on the racking during proper manipulation of the pallets. Forklift truck drivers therefore need special training to work in storage facilities, as the design of storage facilities does not usually take into account such large, additional and avoidable forces as dragging or impact.

Pallets should not be loaded asymmetrically because it leads to dangerous overloading of the racking systems by point loads. In the following we describe some examples of incorrect loading patterns which do not result in uniformly distributed loads, but point loads.

As the name suggests, with this type of storage, the loads are placed on the pallet racking beams at specific points. However, these components were designed and dimensioned in accordance with the relevant regulations only for uniformly distributed loads.

If you require load storage with point loads in your warehouse, please contact us in order to determine the correct combination of shelving uprights and beams.

1. Storage of pallets with load overhang

Storing pallets with load overhang can result in overloading of the pallet racking beams. In the example shown, in a racking bay with 2,700 mm long beams, only 2 pallets were used instead of the normal 3 pallets.

The entire shelf load is therefore only distributed over two pallets instead of evenly over three!

NOTE: This means that half of the total shelf load is centred on the beams.

Remedial action required:

After consultation with us, thicker pallet rack beams may have to be used.

NOT PERMITTED!

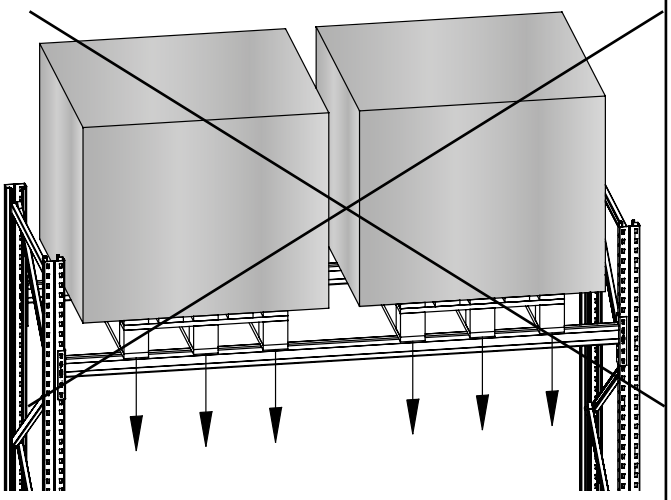

2. Storage of underlaid storage material with two wooden beams

When storing underlaid storage material, impermissible point loads are generated; depending on the arrangement of the beams this can even occur when the stored goods are placed on pallets. In this example, the entire shelf load is on two points.

Remedial action required:

After consultation with us, thicker pallet rack beams may have to be used.

If necessary, the goods will have to be re-palletised or stored on additional, appropriately dimensioned loading aids such as deep angular support frames.

NOT PERMITTED!

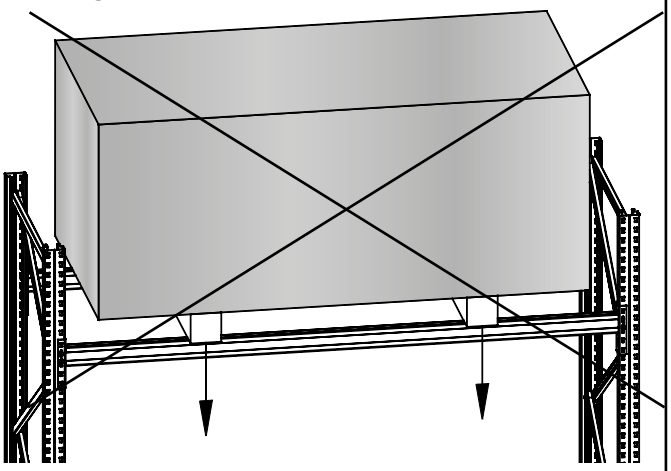

Storage of pallets, unevenly distributed load

3. Storage of cylindrical (round) goods

When storing rolls, drums and other round material, point loads are generated - even if the stored goods are stored on pallets. The cylindrical shapes mean that the loads are transferred only centrally and punctually, i.e. in this example to the respective central bearer of the Euro pallet.

Remedial action required:

After consultation with us, thicker pallet rack beams may have to be used. Another measure can be the use of centring aids, e.g. made of wood. This measure allows the point loads to be transferred as area loads.

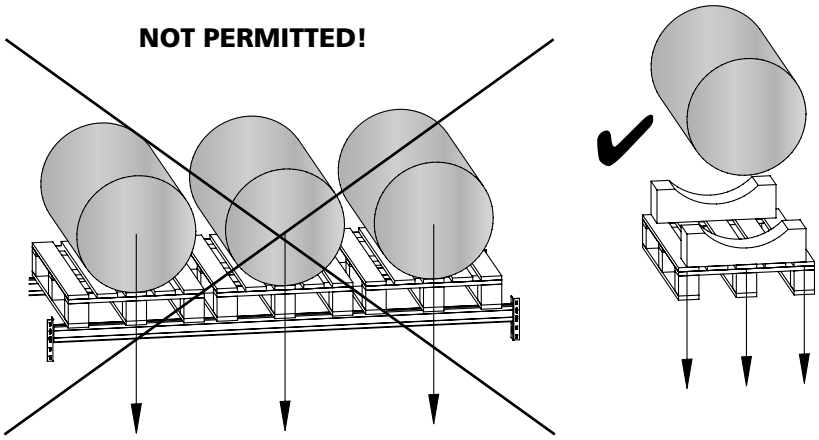

4. Storage of non-centred goods

If the load carriers are not loaded evenly, this can lead to one-sided loading of the pallet racking beams. The example shows an improper loading, here about 80 - 90% of the shelf load is carried by only one pallet rack beam – **NOT PERMISSIBLE**!

The loads must be borne equally by both beams.

Remedial action required:

Immediately restack, the load on the pallet must be evenly distributed.

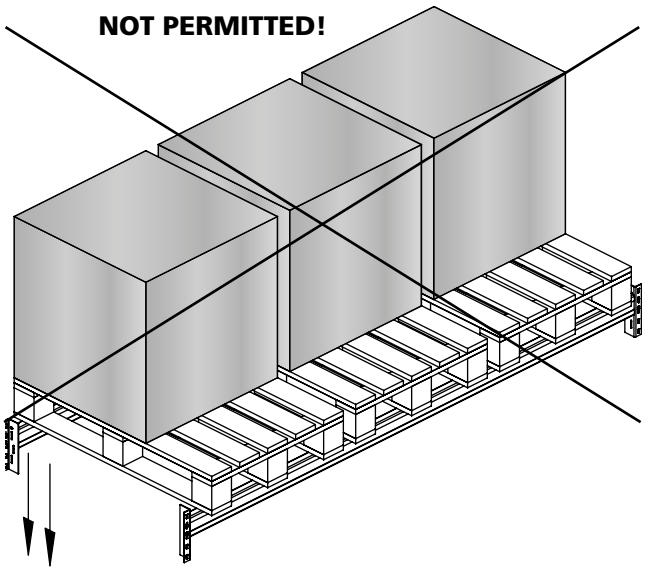

Storage of pallets, unevenly distributed load

5. Widely varying pallet weights in a shelf

If pallets with very different load weights are stored in one racking level, the pallet racking beams may also not be evenly loaded. In the example on the right, 50% of the shelf load falls on the centre of the pallet rack beams.

Remedial action required:

If possible, always store pallets of approximately the same weight. If this is not possible, heavier pallets should not always be stored on the outside, not the middle, of the shelf.

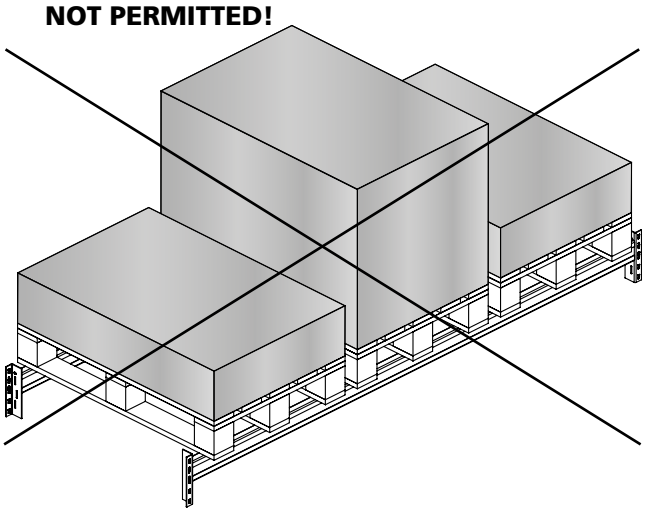

6. Differently loaded pallets

If load carriers are loaded unevenly, this not only results in spot loads on the shelves, but there is also the risk that the load can slip, and individual parts can fall down.

Remedial action required:

Load the load carriers evenly, secure small parts and loose goods on the pallets against falling.

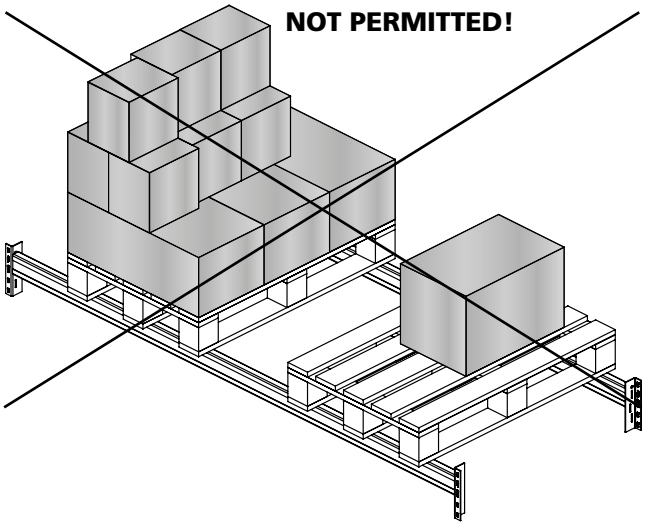

Uneven loading of the pallets can shift the load centres of gravity.
CAUTION: RISK OF TIPPING!

SCHULTE Lagertechnik

Assembly of upright frames

CAUTION: Make sure that the window holes are in the correct position **when starting assembly!**

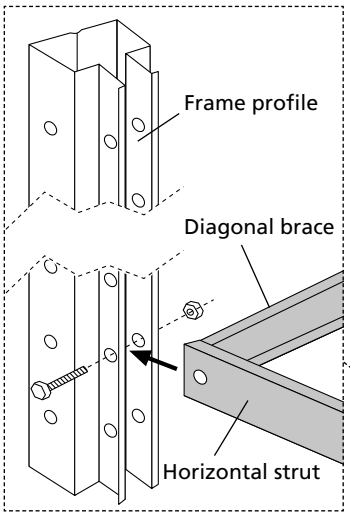

Place horizontal braces and diagonal braces between the frame profile and bolt them together!

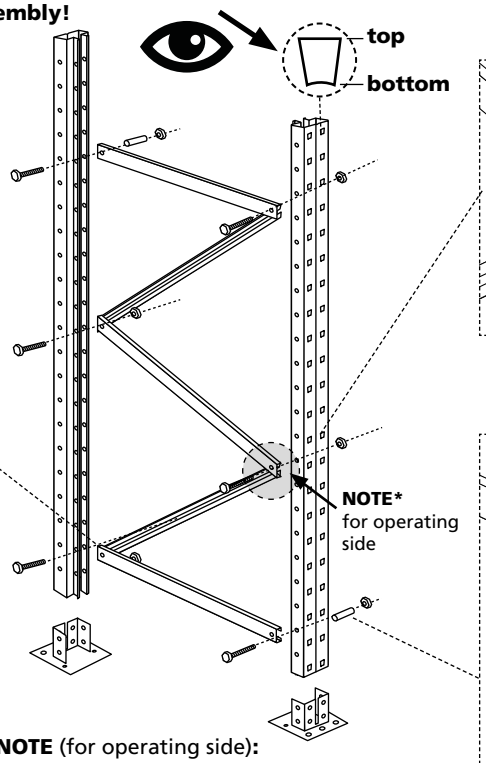

Observe the table on page 13 for the assembly of the horizontal and diagonal braces!

***NOTE** (for operating side)**:**
We recommend placing the first diagonal joint of the framework on the operating side of the shelf, see Fig. (no static obligation)

Double connection without spacer sleeve

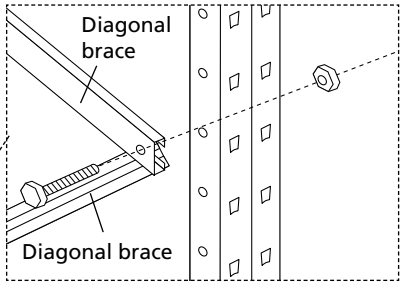

Single connection with spacer sleeve

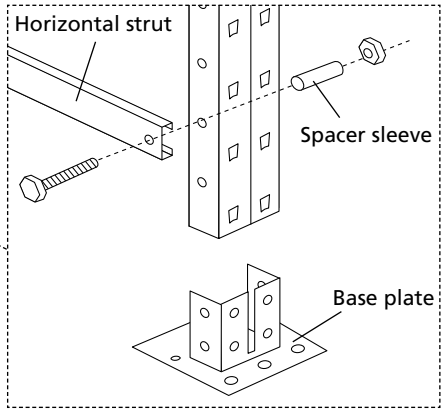

Assembly of base plates

Upright frames Type S610-M18

Upright frames Type S625-A18 / S635-B20 / S645-B25

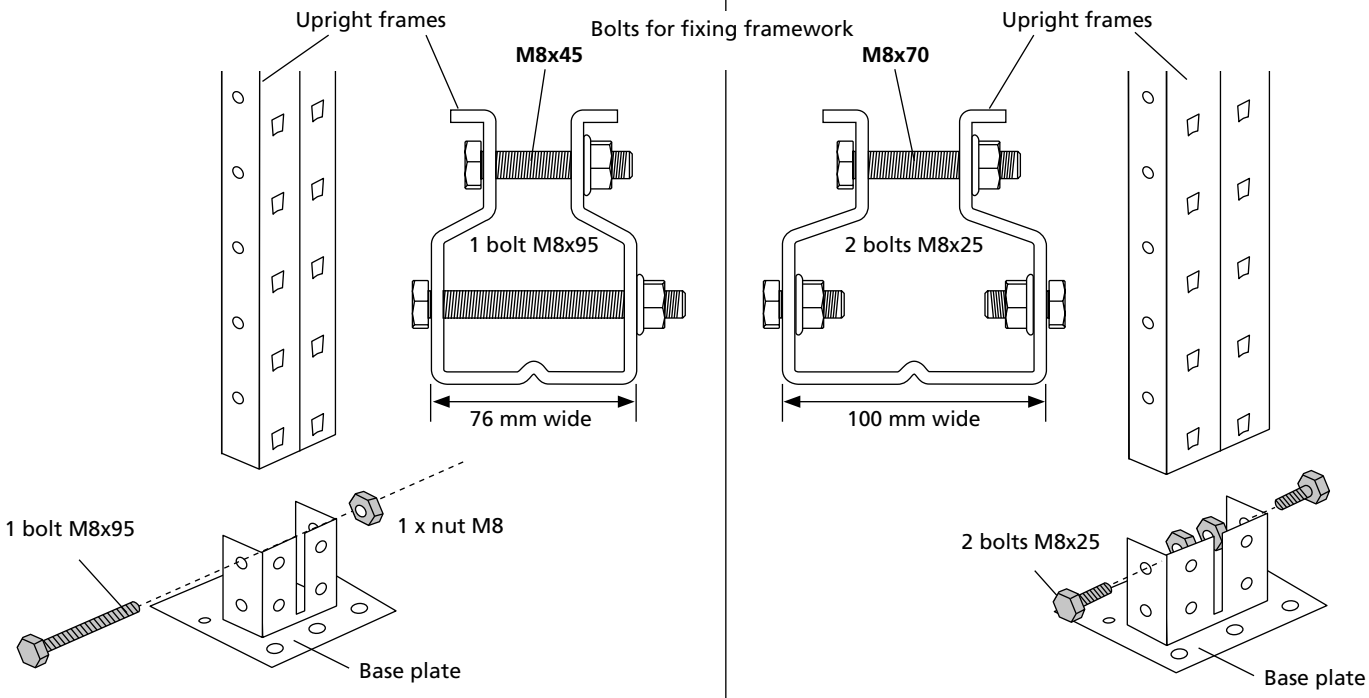

Table 1: Frame assembly with horizontal and diagonal braces

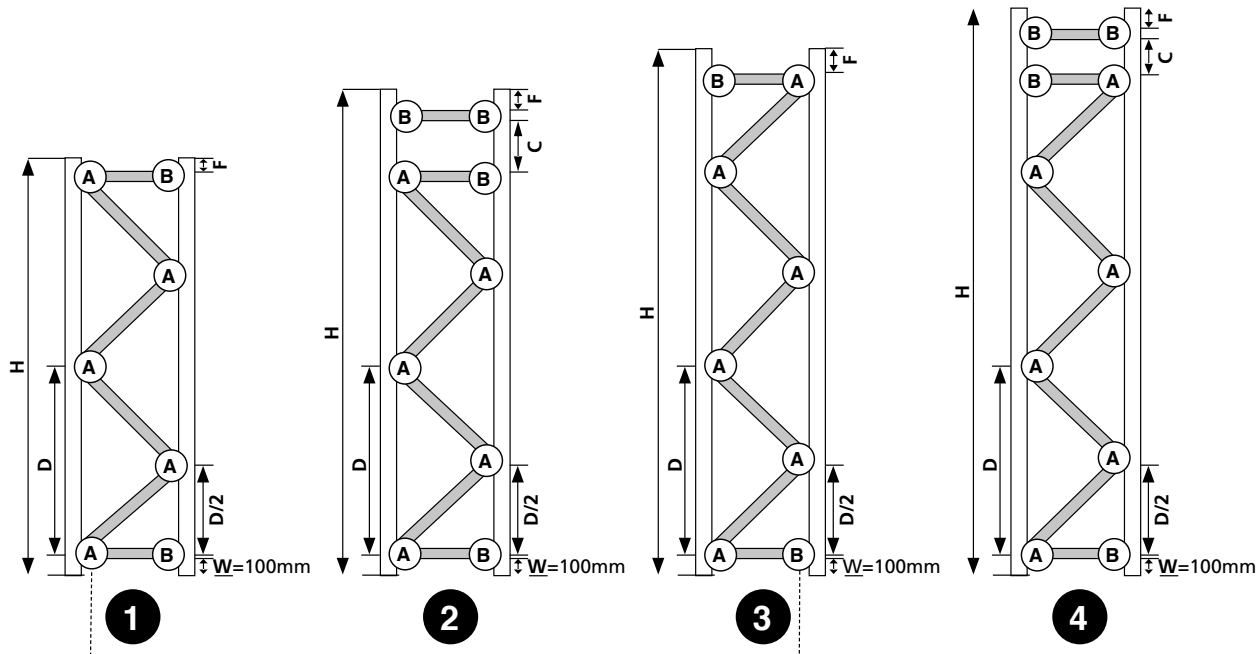

Double connection

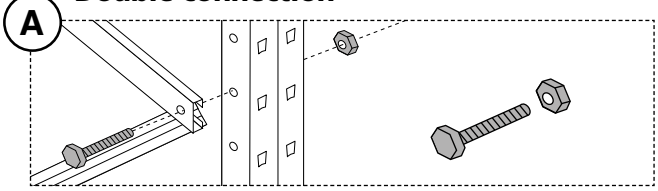

Single connection

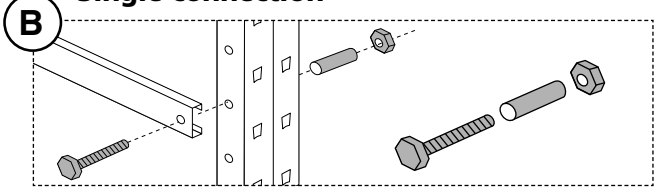

Type S610-M18 / S625-A18

H mm	1	2	3	4			B	A	C mm	F mm
2000			●		3	2	2	4	0	100
2500				●	3	3	4	4	550	50
3000		●			4	3	4	5	450	50
3500				●	5	3	4	6	350	50
4000		●			6	3	4	7	250	50
4500			●		7	2	2	8	0	200
5000	●				8	2	2	9	0	100
5500		●			8	3	4	9	550	50
6000				●	9	3	4	10	450	50
6500		●			10	3	4	11	350	50
7000				●	11	3	4	12	250	50
7500	●				12	2	2	13	0	200
8000			●		13	2	2	14	0	100
8500				●	13	3	4	14	550	50
9000		●			14	3	4	15	450	50
9500				●	15	3	4	16	350	50
10000		●			16	3	4	17	250	50
10500			●		17	2	2	18	0	200
11000	●				18	2	2	19	0	100
11500		●			18	3	4	19	550	50
12000				●	19	3	4	20	450	50

D mm	D/2 mm

Type S635-B20 / S645-B25

H mm	1	2	3	4			B	A	C mm	F mm
2000		●			2	3	4	3	450	50
2500				●	3	3	4	4	250	50
3000	●				4	2	2	5	0	100
3500		●			4	3	4	5	550	50
4000				●	5	3	4	6	350	50
4500	●				6	2	2	7	0	200
5000		●			6	3	4	7	650	50
5500				●	7	3	4	8	450	50
6000		●			8	3	4	9	250	50
6500			●		9	2	2	10	0	100
7000				●	9	3	4	10	550	50
7500		●			10	3	4	11	350	50
8000			●		11	2	2	12	0	200
8500				●	11	3	4	12	650	50
9000		●			12	3	4	13	450	50
9500				●	13	3	4	14	250	50
10000	●				14	2	2	15	0	100
10500		●			14	3	4	15	550	50
11000				●	15	3	4	16	350	50
11500	●				16	2	2	17	0	200
12000		●			16	3	4	17	650	50

D mm	D/2 mm

Length dimensions for horizontal and diagonal braces

Frame type S610-M18

Frame depth	Length Horizontal	Length Diagonal
800 mm	752 mm	973 mm
1100 mm	1052 mm	1217 mm

Frame type S625-A18

Frame depth	Length Horizontal	Length Diagonal
800 mm	715 mm	945 mm
1100 mm	1015 mm	1186 mm

Frame type S635-B20 / S645-B25

Frame depth	Length Horizontal	Length Diagonal
800 mm	667 mm	983 mm
1100 mm	967 mm	1204 mm

Assembly of starter and extension shelving

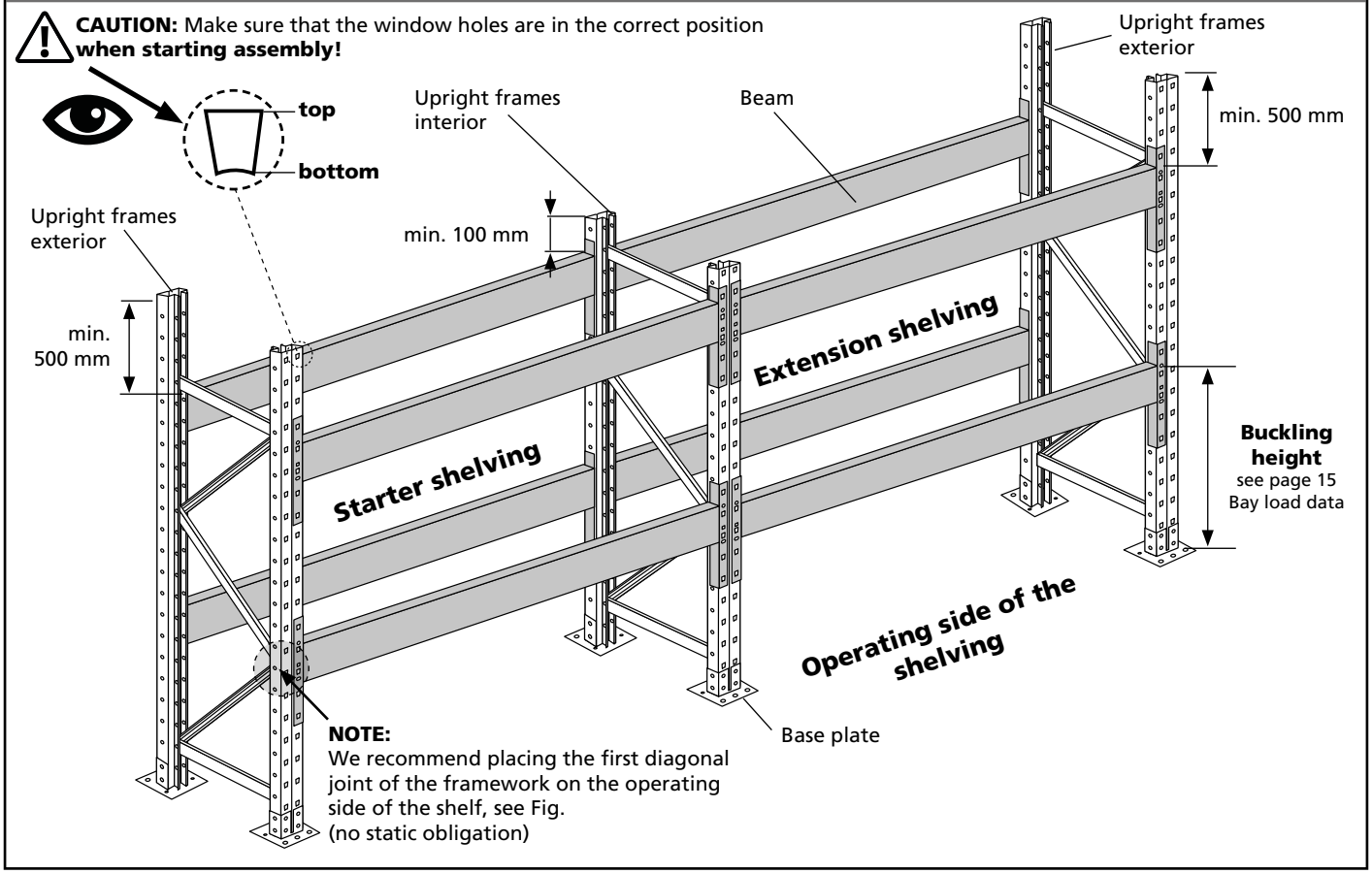

Spacer

Spacers connect two single shelving units to one double shelving unit.

IMPORTANT: The spacers must always be fitted at the connection points of the braces. (see figure below)!

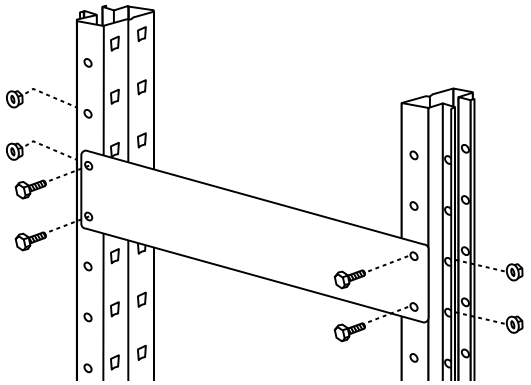

Required number of spacers for height

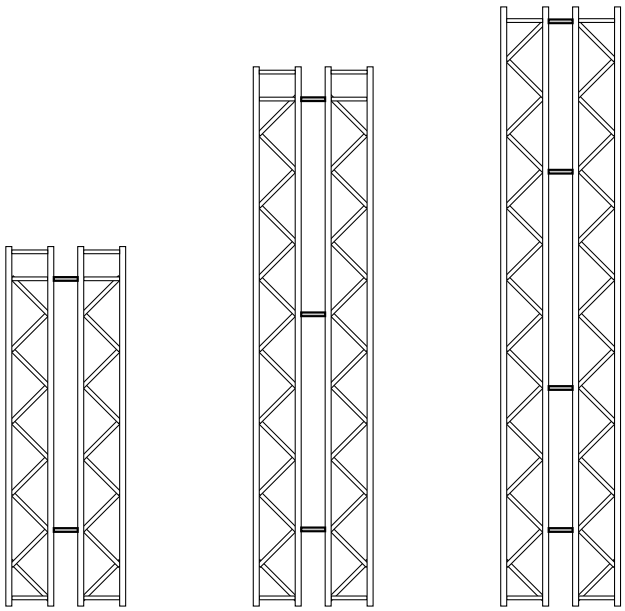

up to 6,000 mm

6,001 - 9,000 mm
3 pieces

9,001 - 13,000 mm
4 pieces

Loading values

Reduction of the bay load data if there are less than 3 shelving bays next to each other!

3 bays and more with at least 2 beam pairs = 100%

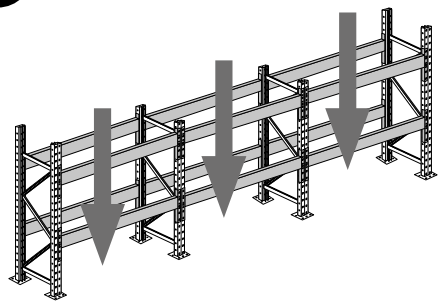

2 bays with at least 2 beam pairs = 90%

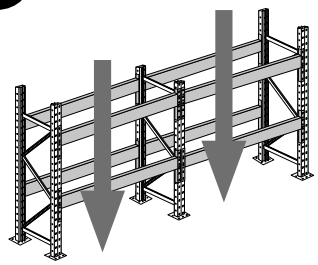

1 bay with at least 2 beam pairs = 80%

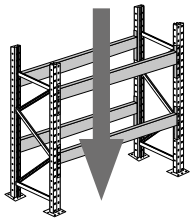

The following bay load data (100 %) apply to 3 shelving bays and more next to each other with at least 2 beam pairs.

Loads for 1 or 2 fields are reduced as a percentage according to the graphics on the left.

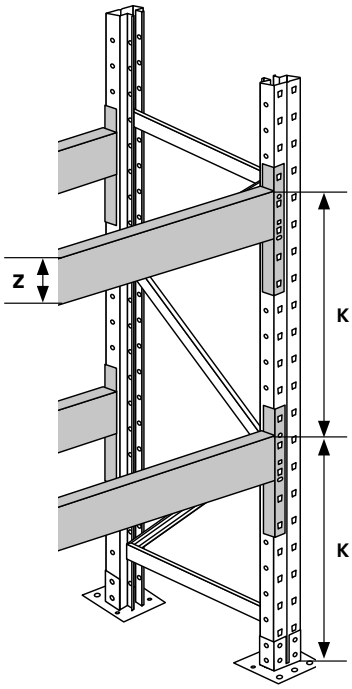

K = bay height / buckling height
Distance from upper edge of hall floor / a shelf to upper edge of the next shelf.

The bay height / buckling height has a direct influence on the bay load of the shelving.

Bay loads for pallet racking, depending on number of beam levels

Max. bay loads for frame type S610-M18

Bay heights	2 beam levels	3 beam levels	4 beam levels	5 beam levels	6 beam levels
1,000 mm	12,040 kg	11,650 kg	10,980 kg	10,815 kg	10,580 kg
1,300 mm	10,415 kg	9,750 kg	9,310 kg	9,110 kg	8,825 kg
1,500 mm	9,495 kg	8,650 kg	8,205 kg	8,020 kg	7,735 kg
2,000 mm	6,950 kg	6,180 kg	5,875 kg	5,630 kg	5,460 kg
2,500 mm	4,630 kg	4,380 kg	4,215 kg	4,065 kg	4,000 kg

Max. bay loads for frame type S635-B20

Bay heights	2 beam levels	3 beam levels	4 beam levels	5 beam levels	6 beam levels
1,000 mm	17,320 kg	17,065 kg	16,555 kg	15,475 kg	14,970 kg
1,300 mm	16,120 kg	15,640 kg	15,085 kg	13,630 kg	12,970 kg
1,500 mm	15,445 kg	15,005 kg	14,175 kg	12,505 kg	12,125 kg
2,000 mm	13,665 kg	12,875 kg	11,910 kg	9,525 kg	9,830 kg
2,500 mm	8,730 kg	8,085 kg	7,765 kg	7,760 kg	6,825 kg

Max. bay loads for frame type S625-A18

Bay heights	2 beam levels	3 beam levels	4 beam levels	5 beam levels	6 beam levels
1,000 mm	13,970 kg	13,485 kg	12,820 kg	12,490 kg	12,305 kg
1,300 mm	13,190 kg	12,500 kg	11,545 kg	11,095 kg	10,865 kg
1,500 mm	12,660 kg	11,810 kg	10,710 kg	10,135 kg	9,865 kg
2,000 mm	10,330 kg	9,800 kg	8,455 kg	7,955 kg	7,620 kg
2,500 mm	8,415 kg	7,135 kg	6,580 kg	6,185 kg	5,960 kg

Max. bay loads for frame type S645-B25

Bay heights	2 beam levels	3 beam levels	4 beam levels	5 beam levels	6 beam levels
1,000 mm	24,450 kg	24,235 kg	24,035 kg	23,210 kg	22,270 kg
1,300 mm	22,225 kg	21,925 kg	21,470 kg	19,635 kg	19,255 kg
1,500 mm	20,810 kg	20,430 kg	18,740 kg	18,450 kg	17,435 kg
2,000 mm	17,255 kg	16,835 kg	14,340 kg	14,030 kg	13,630 kg
2,500 mm	14,105 kg	12,105 kg	11,605 kg	11,070 kg	10,535 kg

Assembly of beams

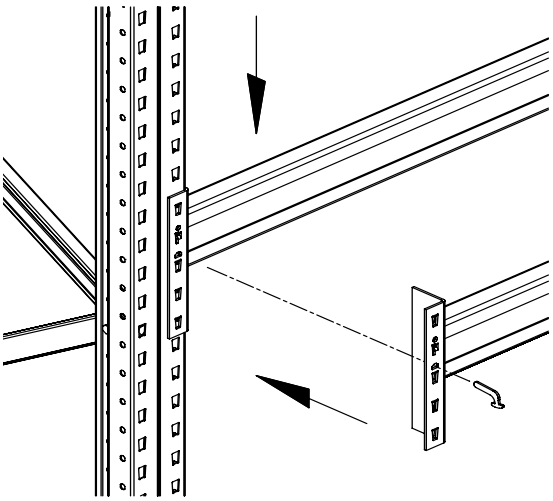

Beam assembly: Insert the beams with the agraffes into the support profiles and insert the locking pins.

Do not use a hammer to assemble the beams!

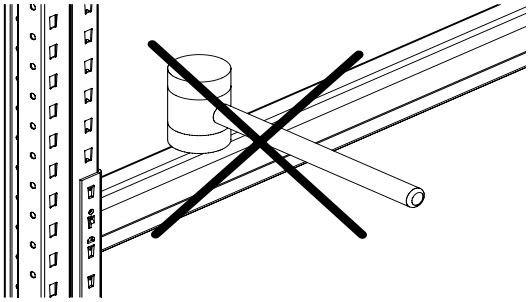

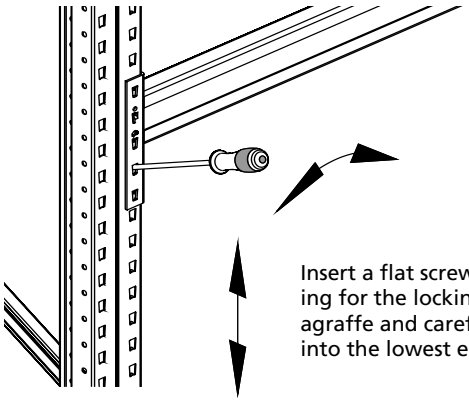

Insert a flat screwdriver into the opening for the locking pin of the beam agraffe and carefully lever the beam into the lowest end position.

Beam load data

Beam load

Length mm	Load capacity kg / pair	Beam type
950	2440	LNS-DUO 80x50x1.5
1350	1995	LNS-DUO 80x50x1.5
1825	2035	LNS-DUO 100x50x1.5
1825	3075	LNS-DUO 100x50x1.5
2225	1695	LNS-DUO 100x50x1.5
2225	3050	LNS-DUO 120x50x1.5
2700	1840	LNS-DUO 100x50x1.5
2700	2580	LNS-DUO 110x50x1.5
3300	1960	LNS-DUO 110x50x1.5

2700	3250	EGN-DUO 120x50x1.5
2700	4450	EGN-DUO 150x50x1.5
3300	3100	EGN-DUO 135x50x1.5
3600	2505	EGN-DUO 120x50x1.5
3600	3415	EGN-DUO 150x50x1.5
3600	4235	EGN-DUO 165x50x1.8
3900	2810	EGN-DUO 140x50x1.5
3900	3935	EGN-DUO 165x50x1.8

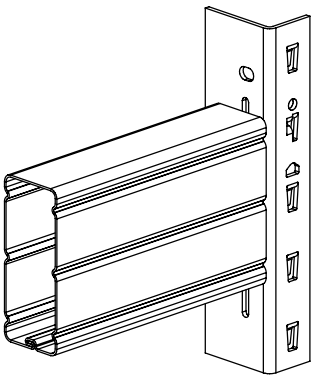

Beam type LNS-DUO

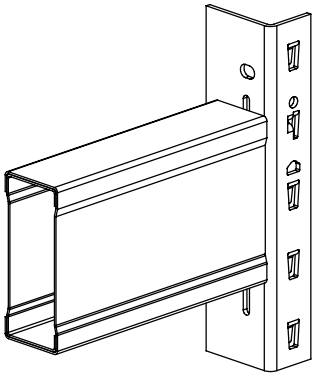

Beam type EGN-DUO

Ground anchoring

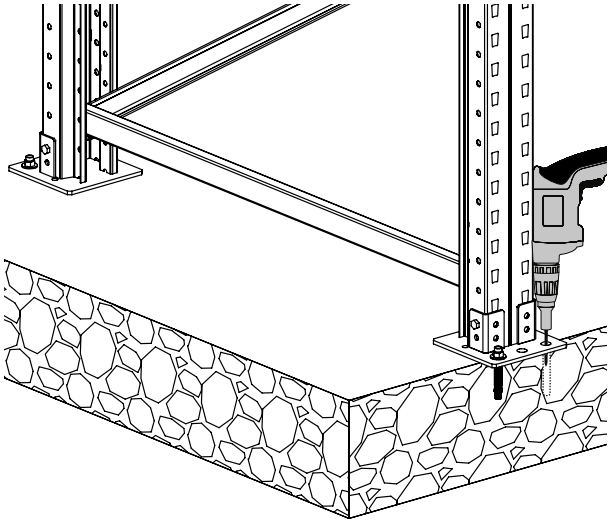

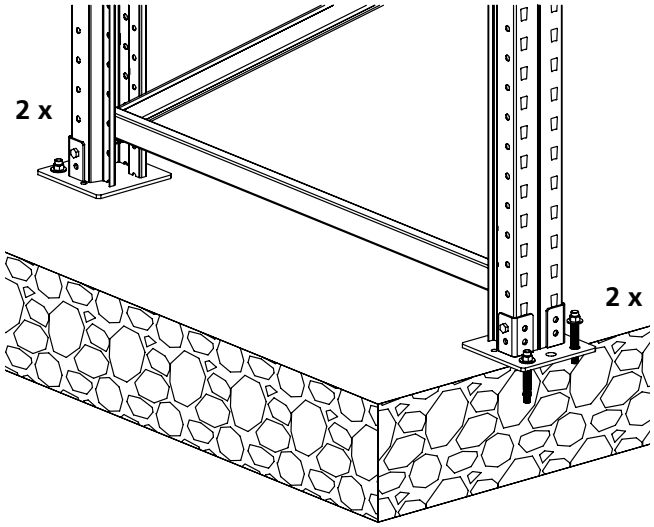

Fixing per base plate with 2x ground anchors, drill Ø 12 mm, drill depth 120 mm

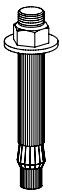

Ground anchoring is always necessary. For pallet racking, please use 2 pcs. ground anchor M12x110 mm, Art. No. 46699 for each base plate.
Drill the holes through the base plates into the ground, insert the anchors and tighten them with the specified torque. The anchors must grip in the concrete.

The requirements for the base plate can be found on page 3, item 10.

Please observe the instructions for ground anchoring for single and double shelving units on page 18!

Crash protection

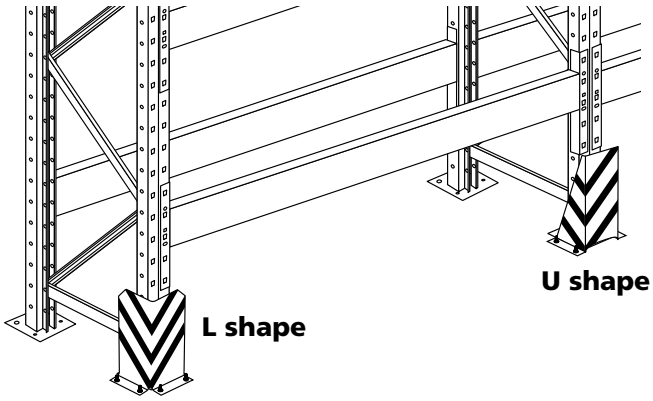

L shape **U shape**

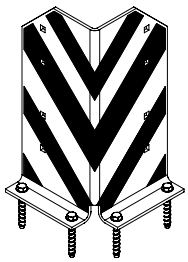

Use bolt anchors!

Ø 10 x 90 mm SW 15
Drill Ø = 10 mm
Drill depth = 100 mm

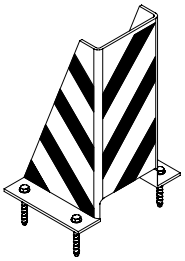

Impact protection corners must always be anchored to the ground!
Minimum distance to shelf support approx. 50 mm. Each corner should be fastened with 4 bolt anchors!

Post protection (optional)

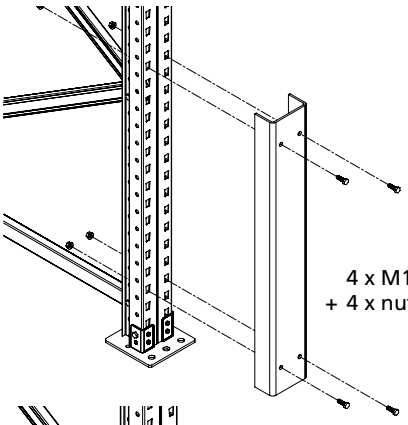

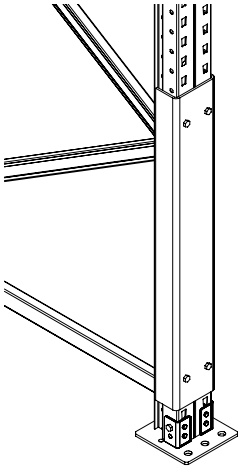

Ground anchoring of pallet racking frames

Anchoring requirements

The number of anchors depends on static specifications, type of shelving, single or double shelving - and possibly on specific conditions at the place of use. In the normal case, the following applies: 2 ground anchors per base plate.

However, certain types of anchoring may be prescribed for different structural specifications.

If there are any anchoring requirements, ensure that the instructions are followed.

Fig. Example single shelving row

2 anchors per base plate

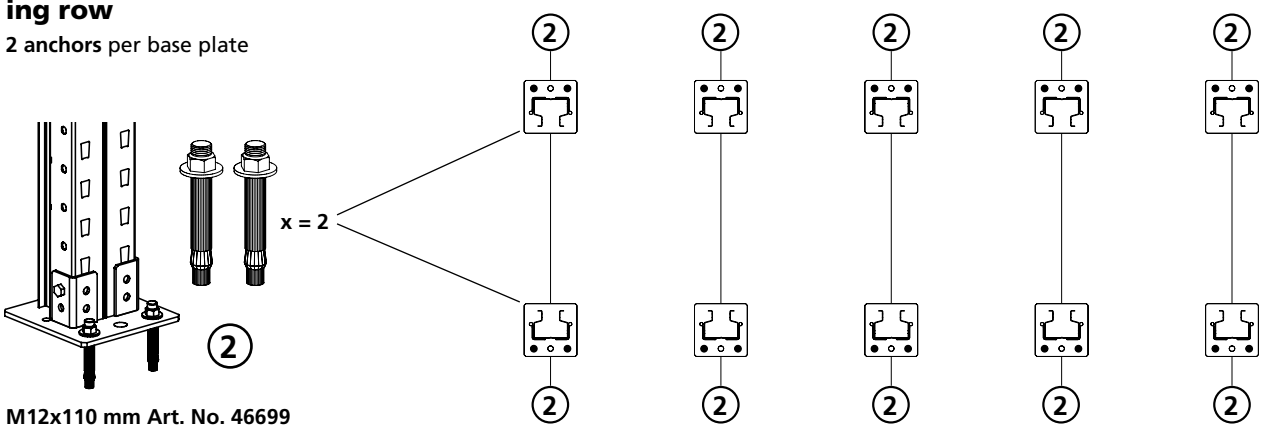

The requirements for the base plate can be found on page 3, item 10.
In case of deviations, please consult SCHULTE Lagertechnik.

Fig. Example double shelving rows

2 anchors per base plate
No. in circle = number of anchors

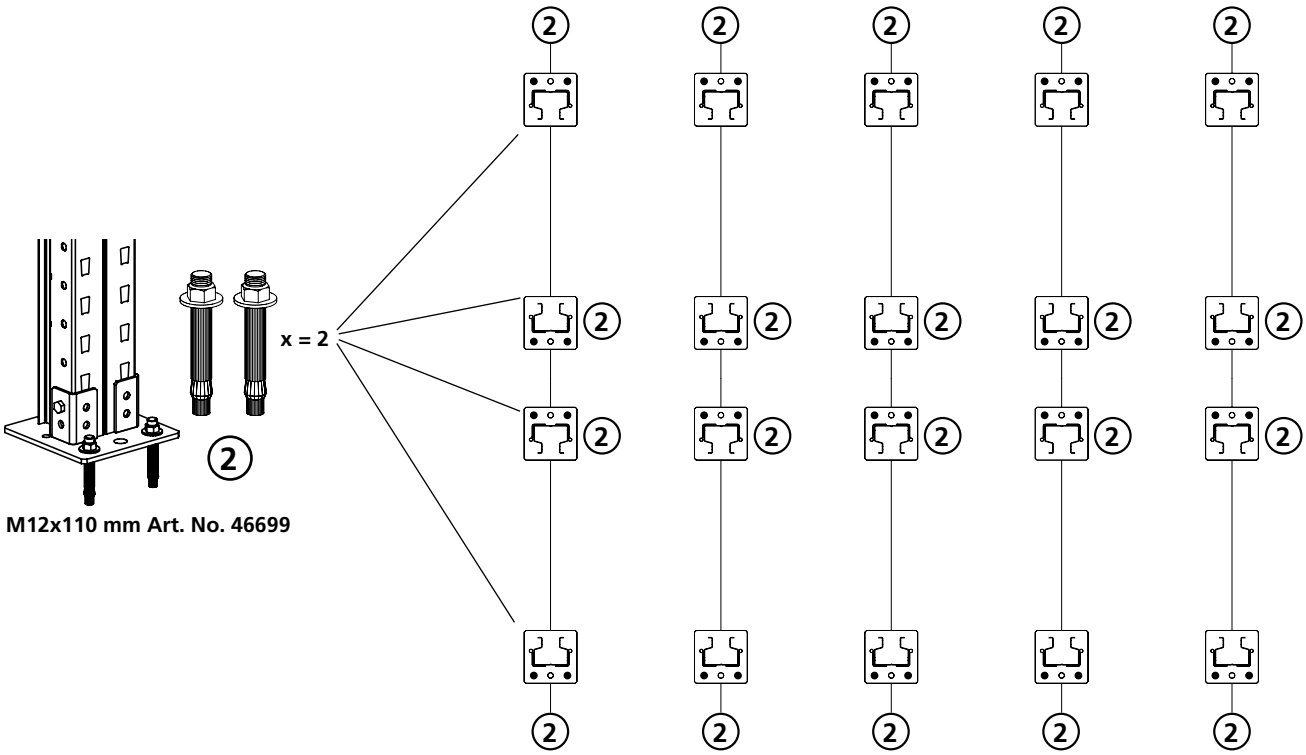

The requirements for the base plate can be found on page 3, item 10.
In case of deviations, please consult SCHULTE Lagertechnik.

Impact protection panel / ground anchoring

Crash protection panel for single shelving

Crash protection panel for double shelving

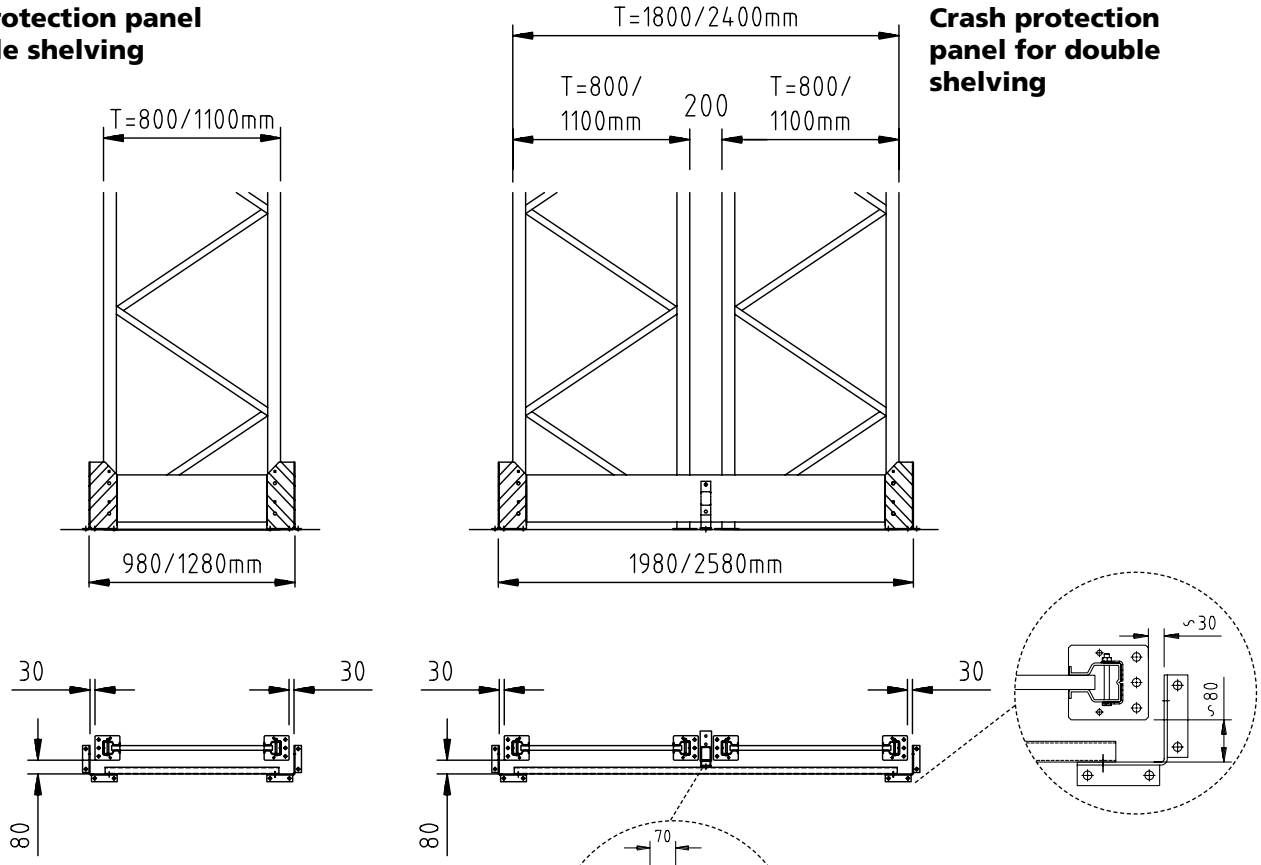

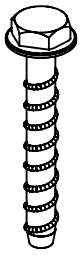

Anchor all crash protection corners and support brackets with bolt anchors.
Bolt anchor Ø 10 x 90 mm
SW 15 Art. No. 16557
Drill Ø = 10 mm
Drill depth = 100 mm

For double shelving:
Central support brackets must be bolted to the crash protection wall profile during assembly!
Anchor support brackets and insert stops.

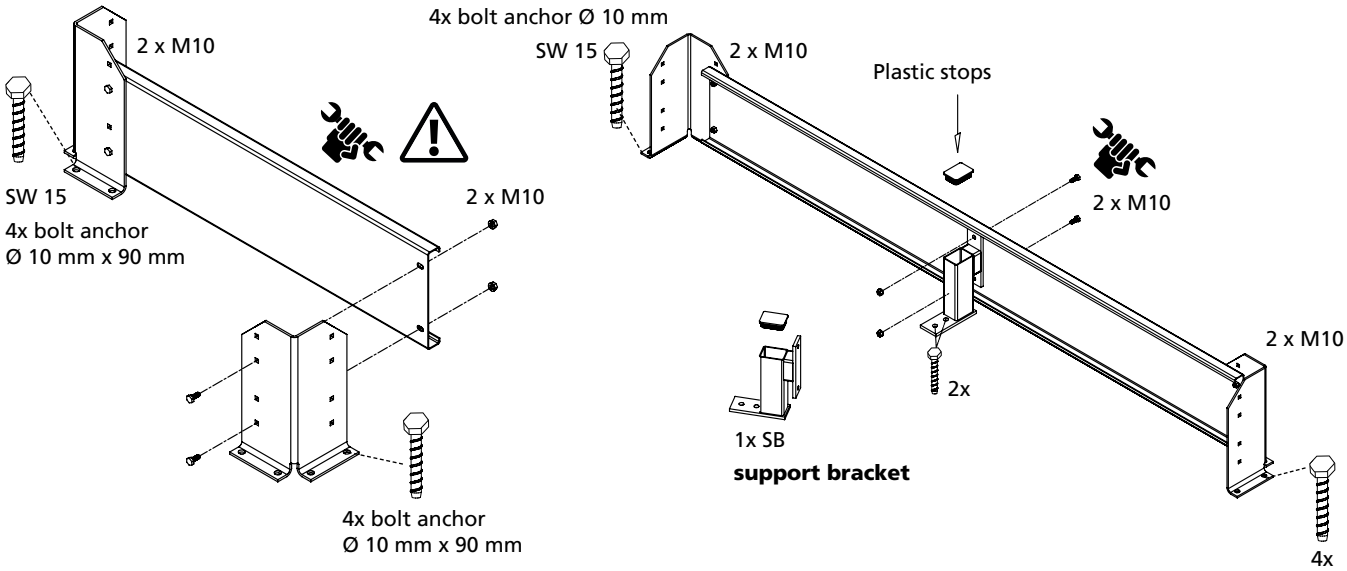

Push-through safeguard (PTS) for single and double shelving

Push-through safeguard (PTS) for single shelving

Insert the PTS brackets* on the shelf frame and bolt each one to the side of the shelf frame (anti-lifting device).

Insert the C-profile into the openings of the PTS brackets and bolt together with the angles.

***PTS bracket** = push-through safeguard bracket
**** PO** = pallet overhang

Amount	Art. No.	Designation
		Push-through safeguard
1		Profile C50/15/D8.5 mm
1	16734-N	2-hook PTS bracket right
1	16739-N	2-hook PTS bracket left
2	16287-N	Angle
2	19896	Bolts M8x20 DIN933 8.8
4	16515	Hexagon nuts M8 with locking tooth
2	16230	Bolts M8x20 DIN603 8.8

Overhang PO** = 50 mm

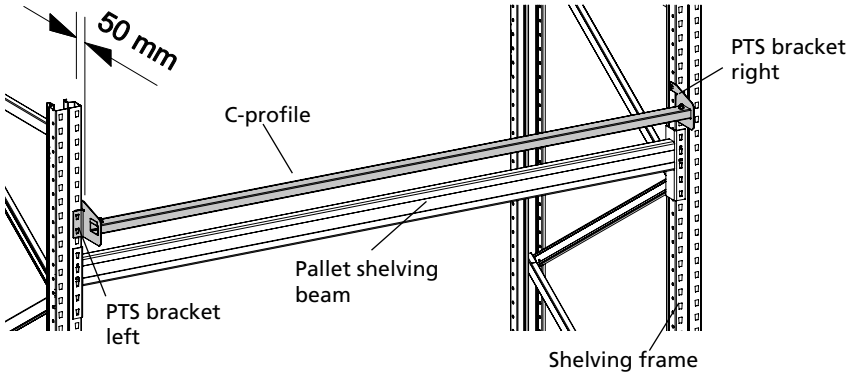

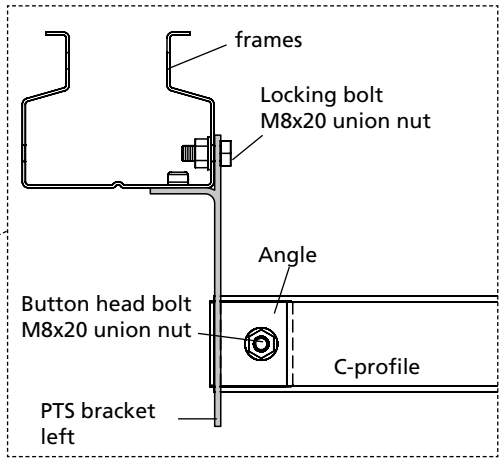

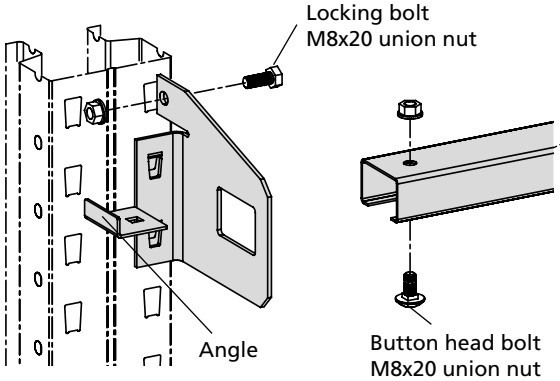

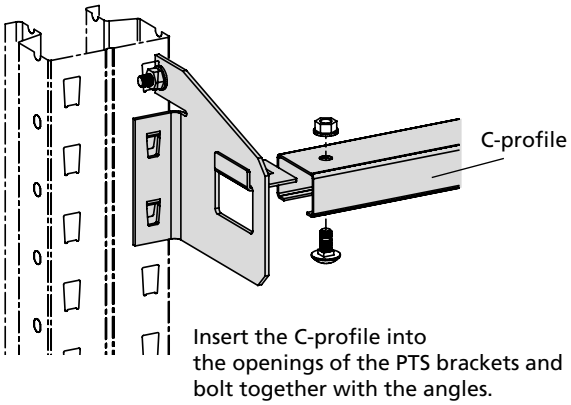

Insert the C-profile into the openings of the PTS brackets and bolt together with the angles.

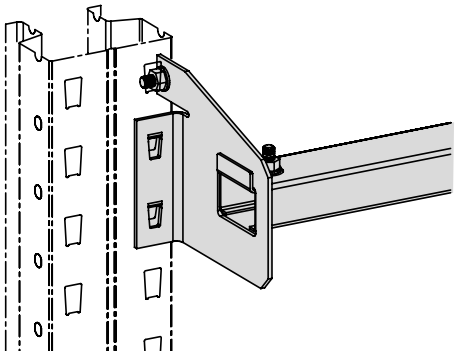

Push-through safeguard (PTS) for double shelving

Overhang PO** = 75 mm

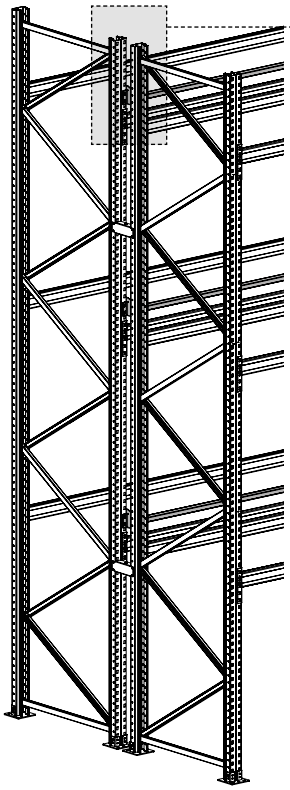

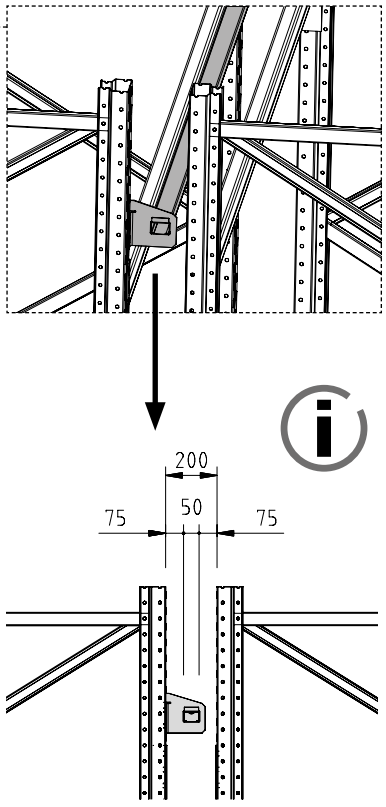

Assembly of wire mesh back panel

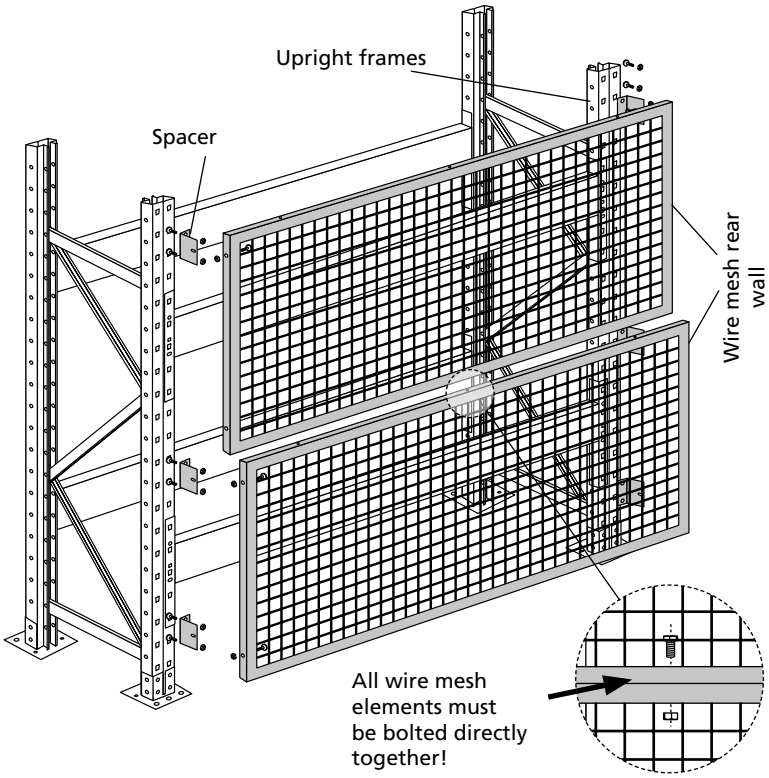

The first wire mesh element is mounted with 4 spacers. The holes on the element indicate the position of the spacers.

Further wire mesh elements (extension elements) are bolted directly to each other and to the existing spacer (see figure below).

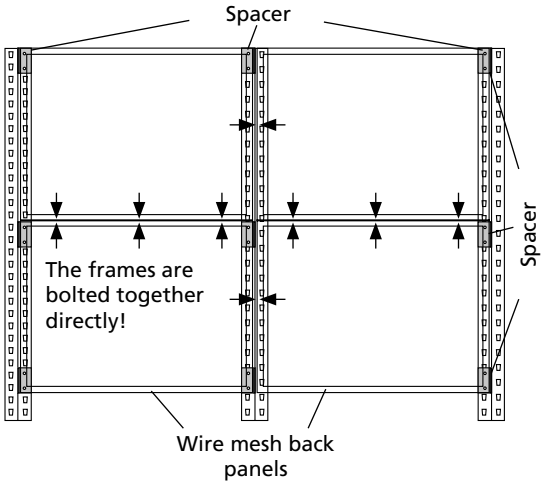

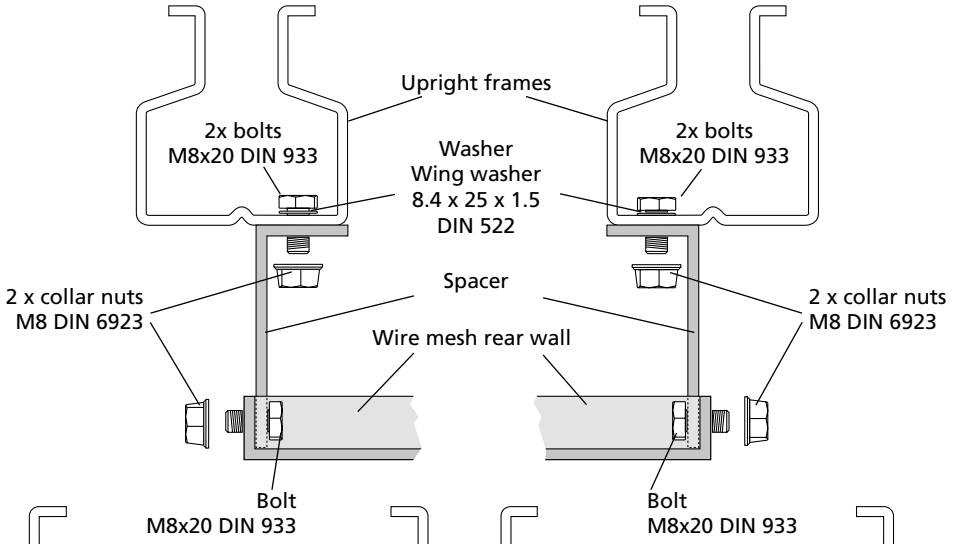

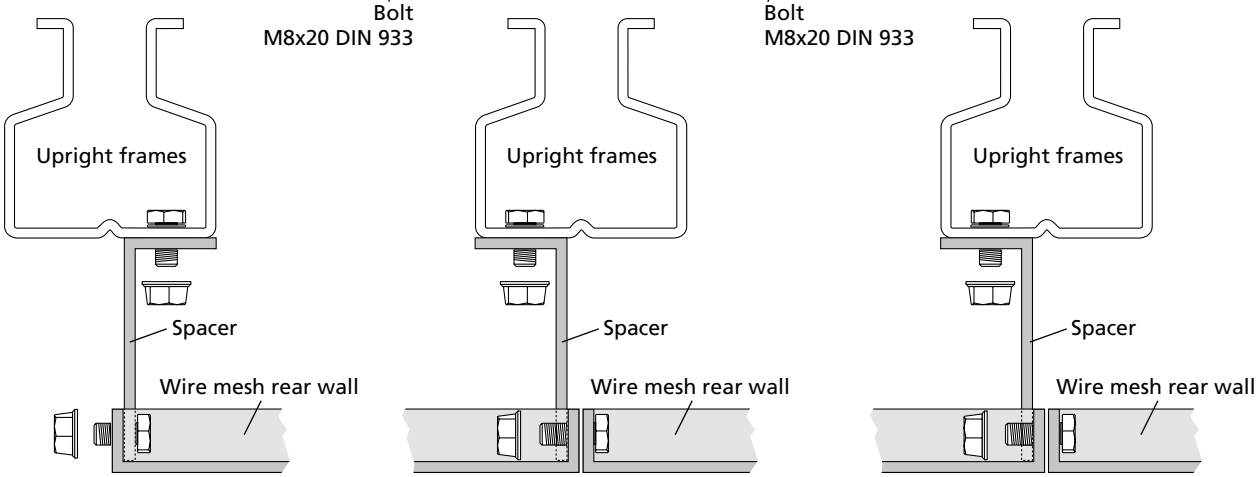

The wire mesh back panels of extension shelving are bolted together to <u>ONE</u> spacer!

Particle board

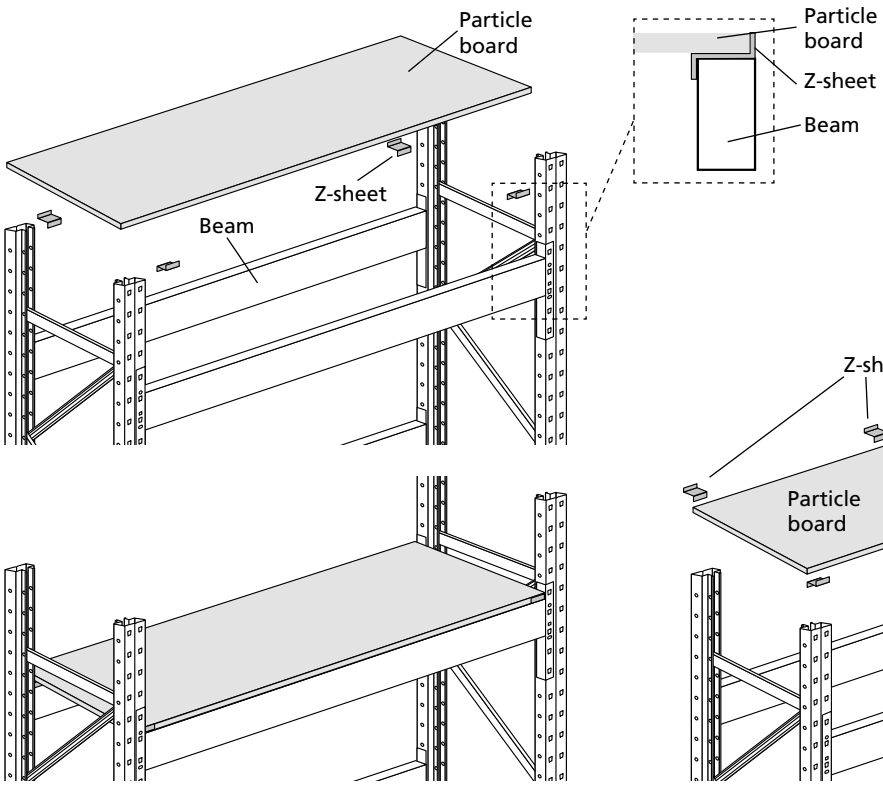

Fig. width 1,825 to 2,700 mm

Number of Z sheets and panels

Beam width	Number Plates	Number Z-sheets
1,825 mm	1	4
2,225 mm	1	4
2,700 mm	1	4
3,600 mm	2	8

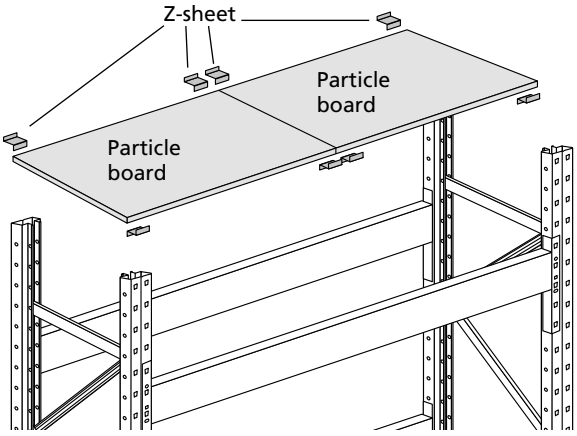

Fig. width: 3,600 mm

Steel panels

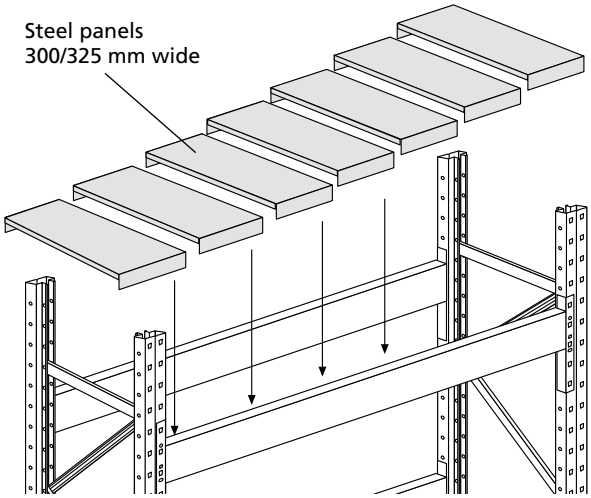

Number and sizes of steel panels

Beam width	Number Steel panels 300mm	Number Steel panels 325 mm
1,825 mm	5	1
2,225 mm	2	5
2,700 mm	9	-
3,600 mm	12	-

Longitudinal support for mesh boxes

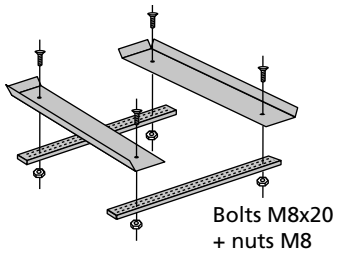

The elements are bolted together with the flat head bolts and placed between the beams.

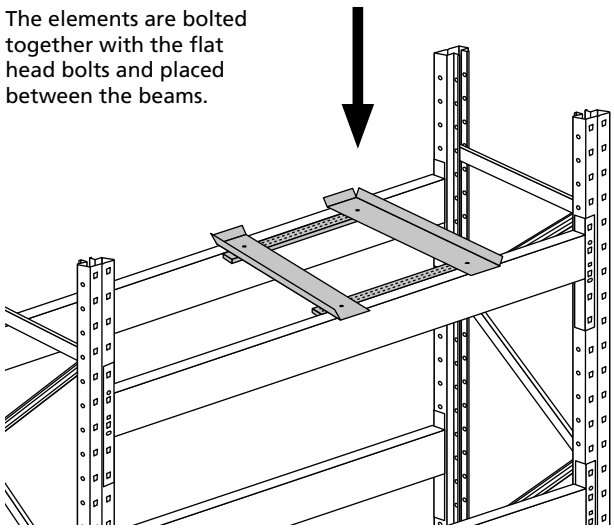

Wire mesh shelves

Wire mesh shelves inserted

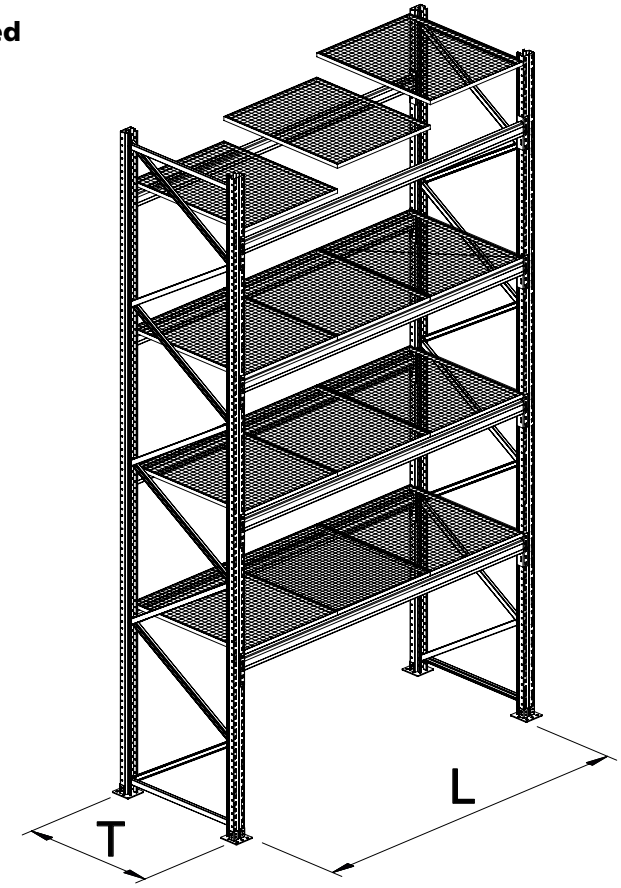

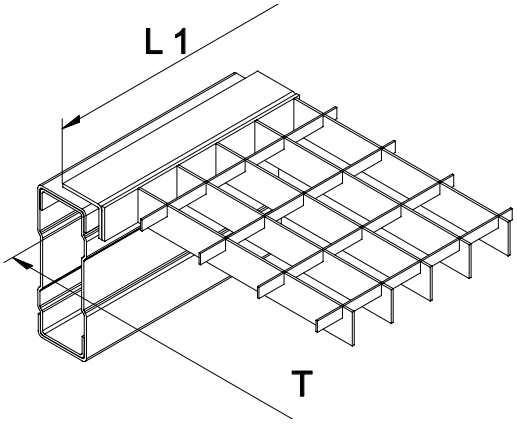

Load data

Mesh grids inserted flush with the beam

Frame depth 800 mm			Frame depth 1100 mm	
L mm Beam length	Shelf load kg	Number of wire mesh shelves	Shelf load kg	Number of wire mesh shelves
950	760	1	1000	1
1350	1080	1	1400	1
1825	1460	2	2000	2
2225	1780	2	2400	2
2700	2160	3	3000	3
3300	2640	3	3600	3
3600	2880	4	3960	4
3900	3120	3	4200	3

Mesh grids inserted

Frame depth 800 mm			Frame depth 1100 mm	
L mm Beam length	Shelf load kg	Number of wire mesh shelves	Shelf load kg	Number of wire mesh shelves
950	760	1	1000	1
1350	1080	1	1400	1
1825	1460	2	2000	2
2225	1780	2	2400	2
2700	2160	3	3000	3
3300	2640	3	3600	3
3600	2880	4	3960	4
3900	3120	3	4200	3

Longitudinal supports

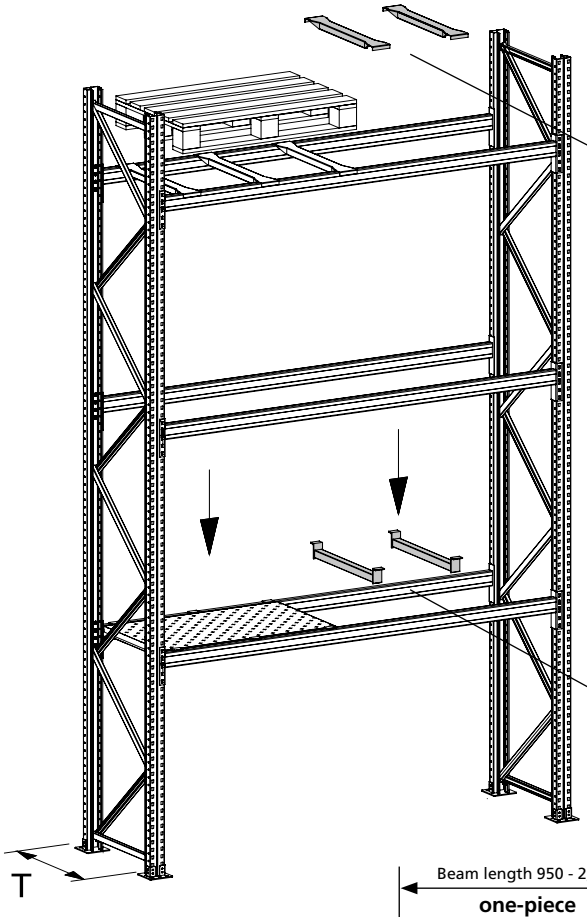

Depth supports for transverse storage flush

	n = 2 (p. pair)	kg
D = 800 mm		1,352 kg
D = 1,100 mm		946 kg

Alternatively, with end tabs set at 90° for centring particle boards in depth

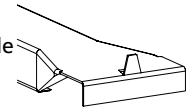

Depth supports recessed

for flush support of particle boards 38 mm between the beams

	n = 1	kg
D = 800 mm		900 kg
D = 1,100 mm		500 kg

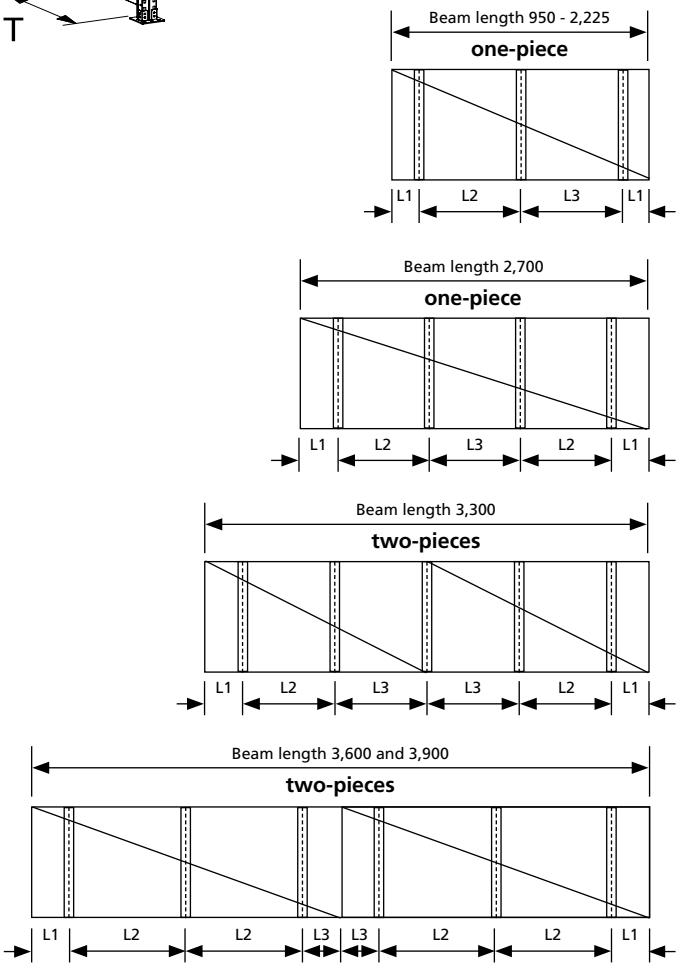

Number of longitudinal supports per beam length

Beam width 50 mm			Installation position of longitudinal supports		
Frame depth mm	Beam length mm	Number of longitudinal supports per beam length	L1	L2	L3
800	950	2	200	550	-
800	1,350	3	150	525	525
800	1,825	3	160	750	750
800	2,225	3	250	860	865
800	2,700	4	255	730	730
800	3,300*	5	250	700	700
800	3,600*	6	250	650	250
800	3,900*	6	250	725	250
1,100	950	2	200	550	-
1,100	1,350	3	150	525	525
1,100	1,825	3	160	750	750
1,100	2,225	3	250	860	865
1,100	2,700	4	255	730	730
1,100	3,300*	5	250	700	700
1,100	3,600*	6	250	650	250
1,100	3,900*	6	250	725	250

* Lengths from 3,300 mm in two-piece design

Bolt-on end upright extension

Bolt-on end upright extension

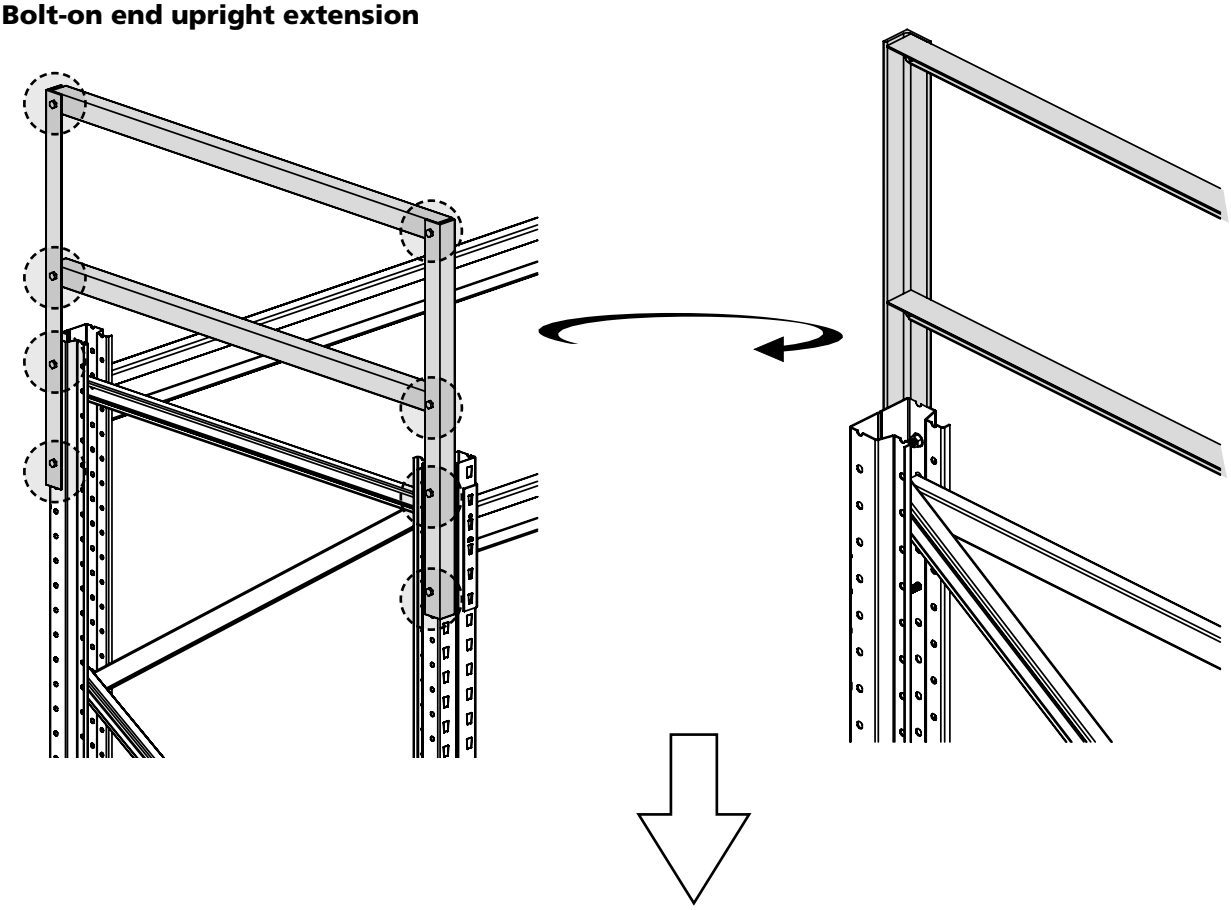

Assembly on pallet shelving uprights

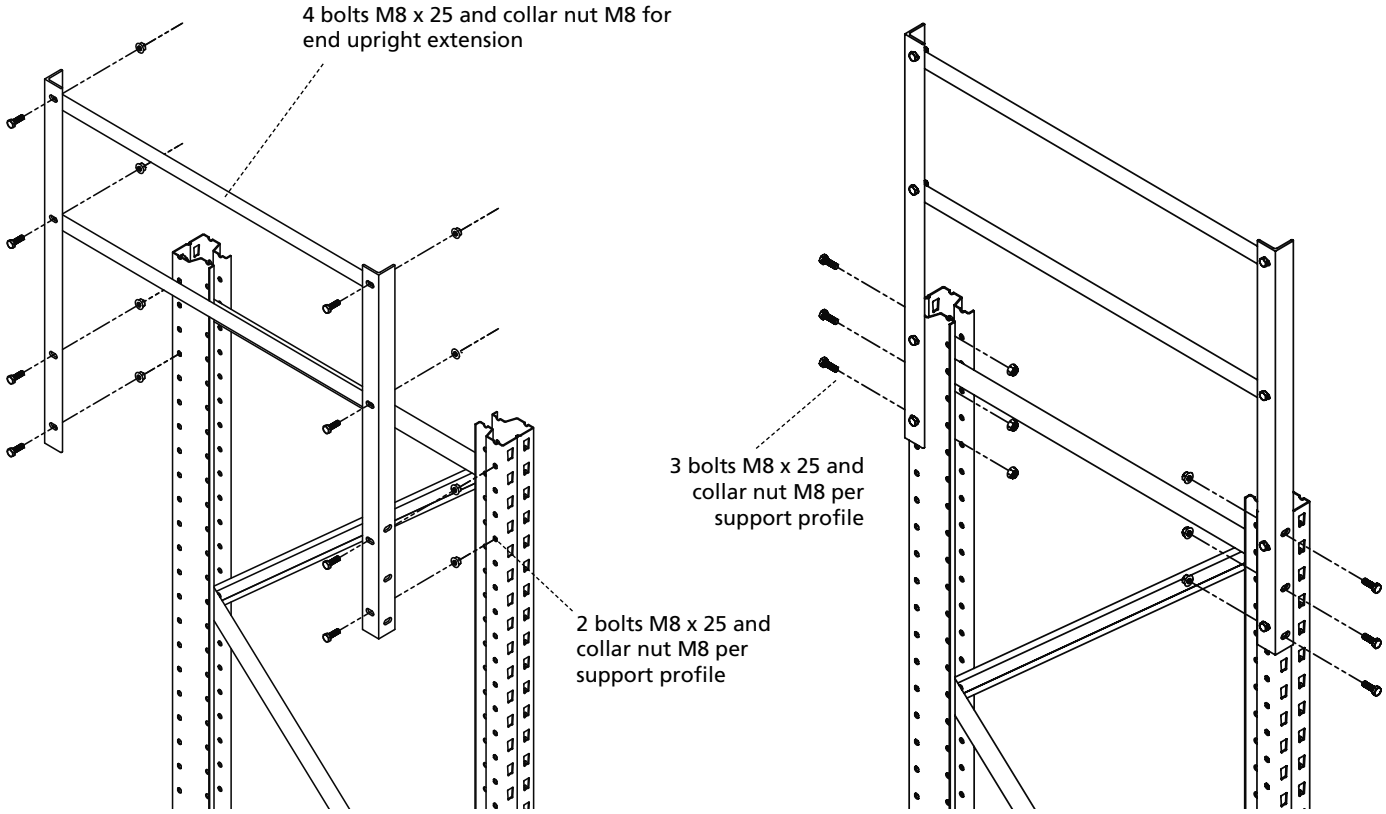

Extension elements

Assembly of extension elements (two-pieces)

Type S610-M18

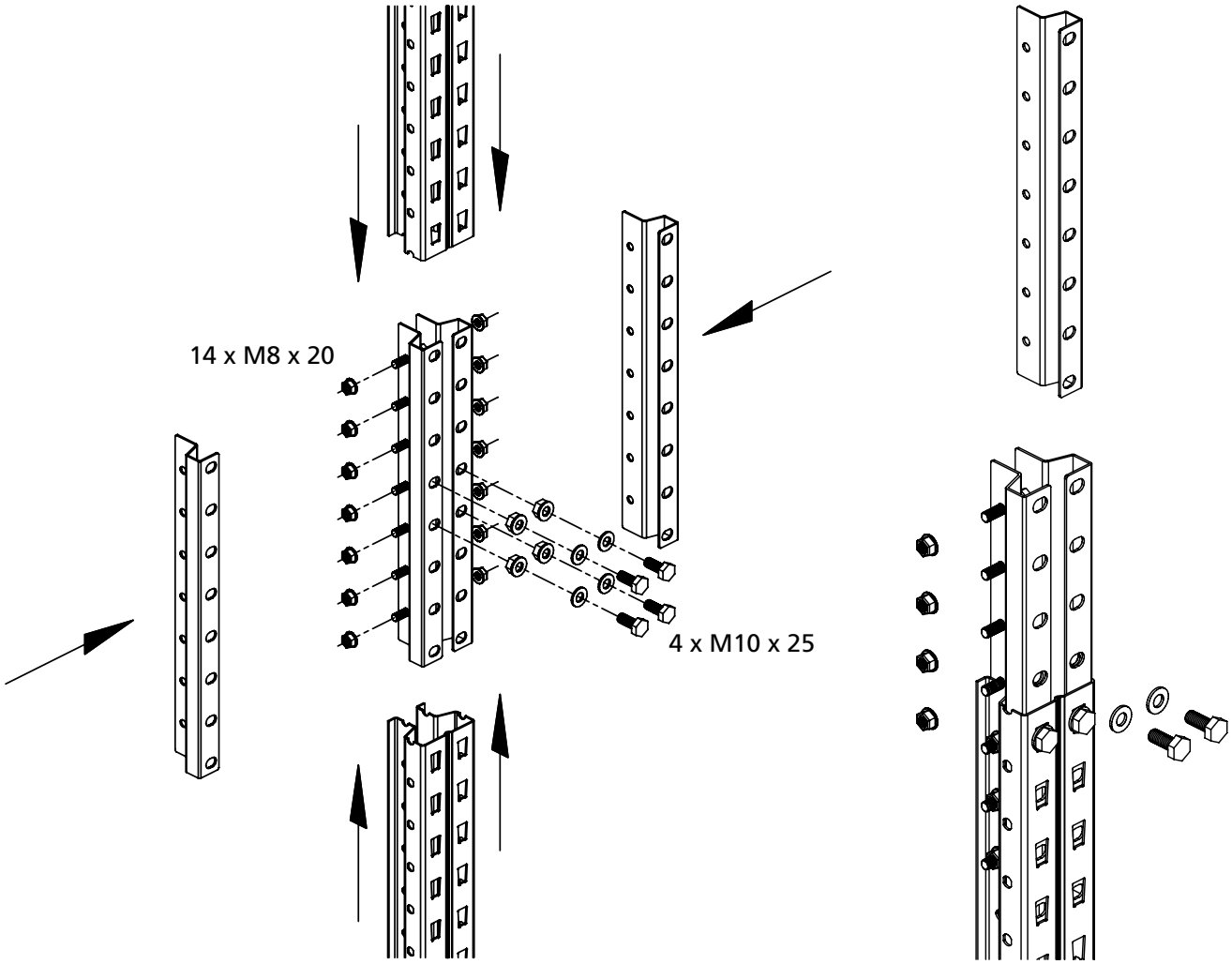

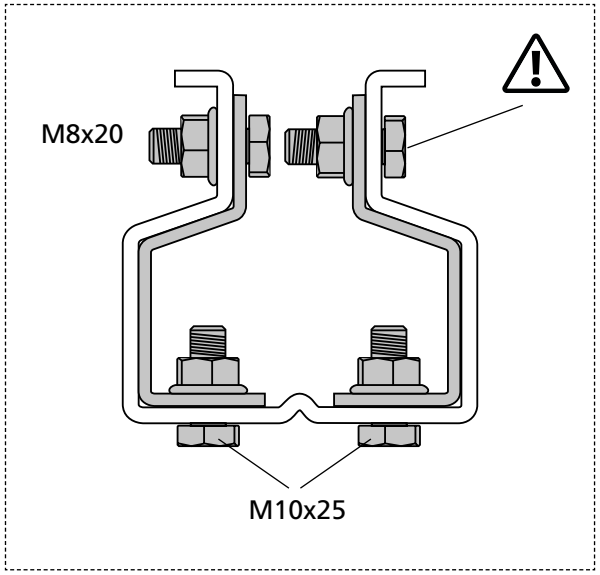

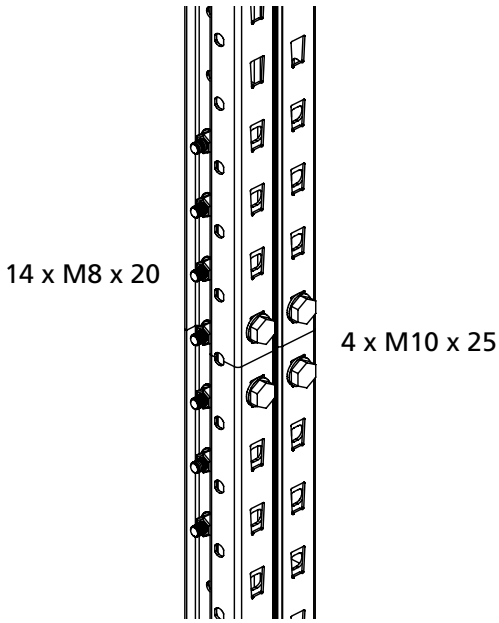

Extension elements

Assembly of extension elements (two-pieces)

Per shelving support 2 pieces half shells

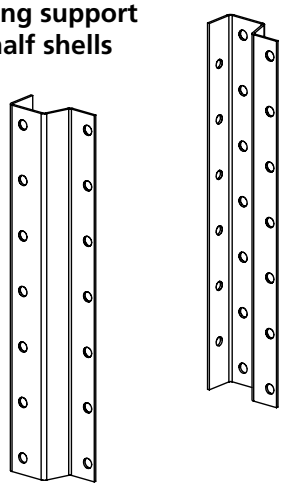

Type S625-A18

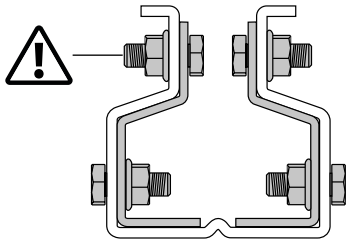

Type S635-B20 / S645-B25

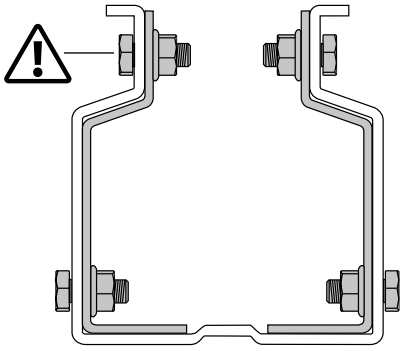

Bolt connections front side

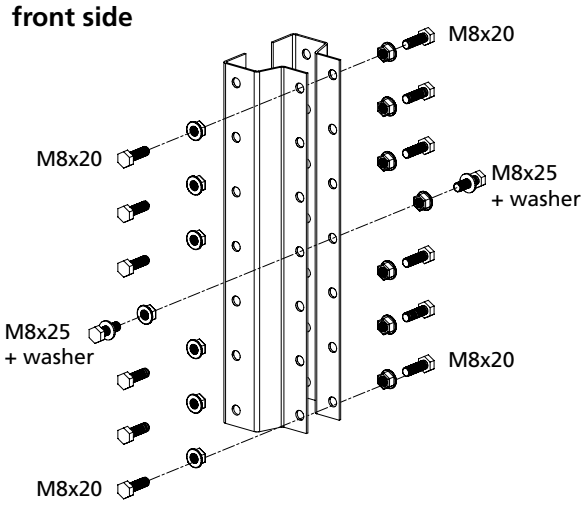

Bolt connections rear side

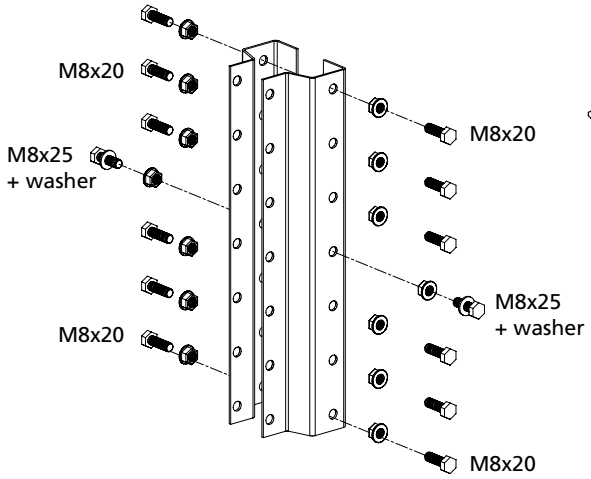

Installation of the connecting shells

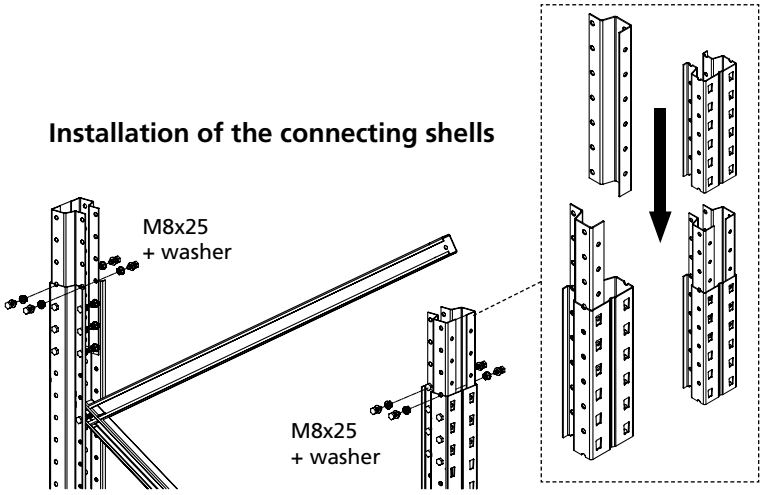

Extension elements

Framework installation

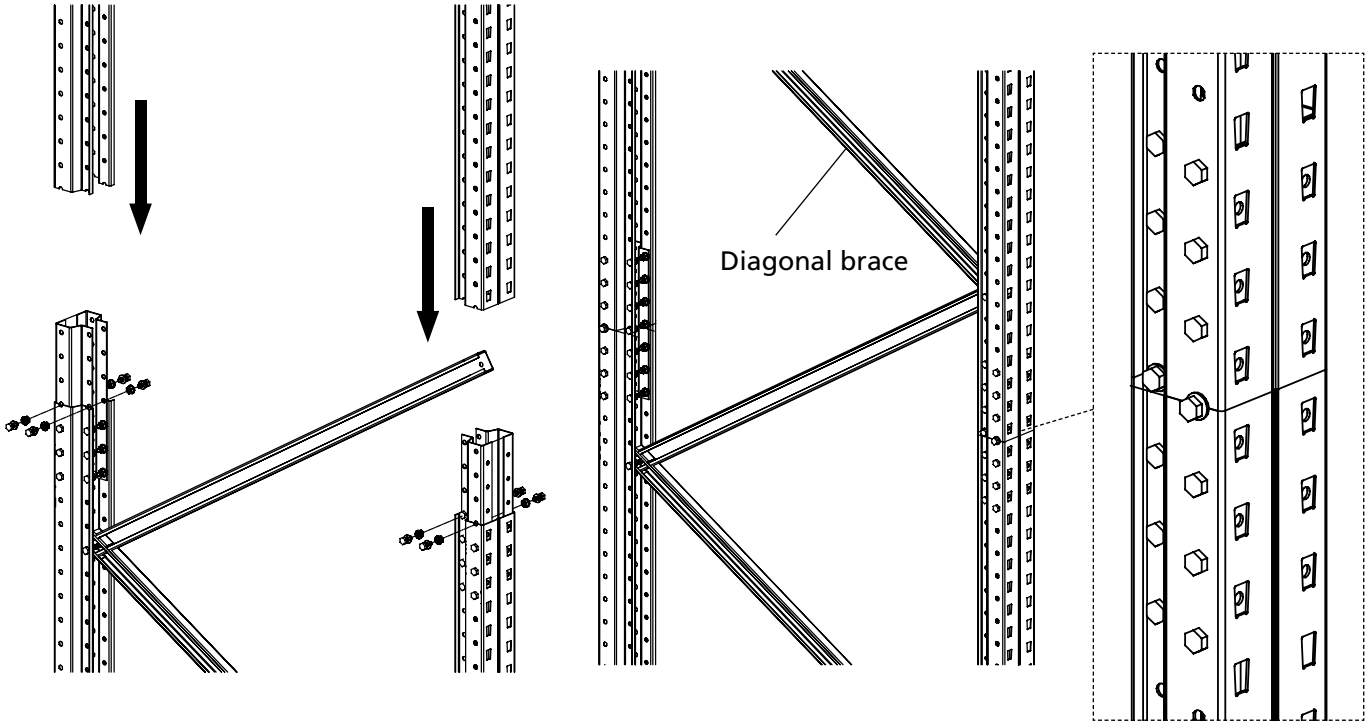

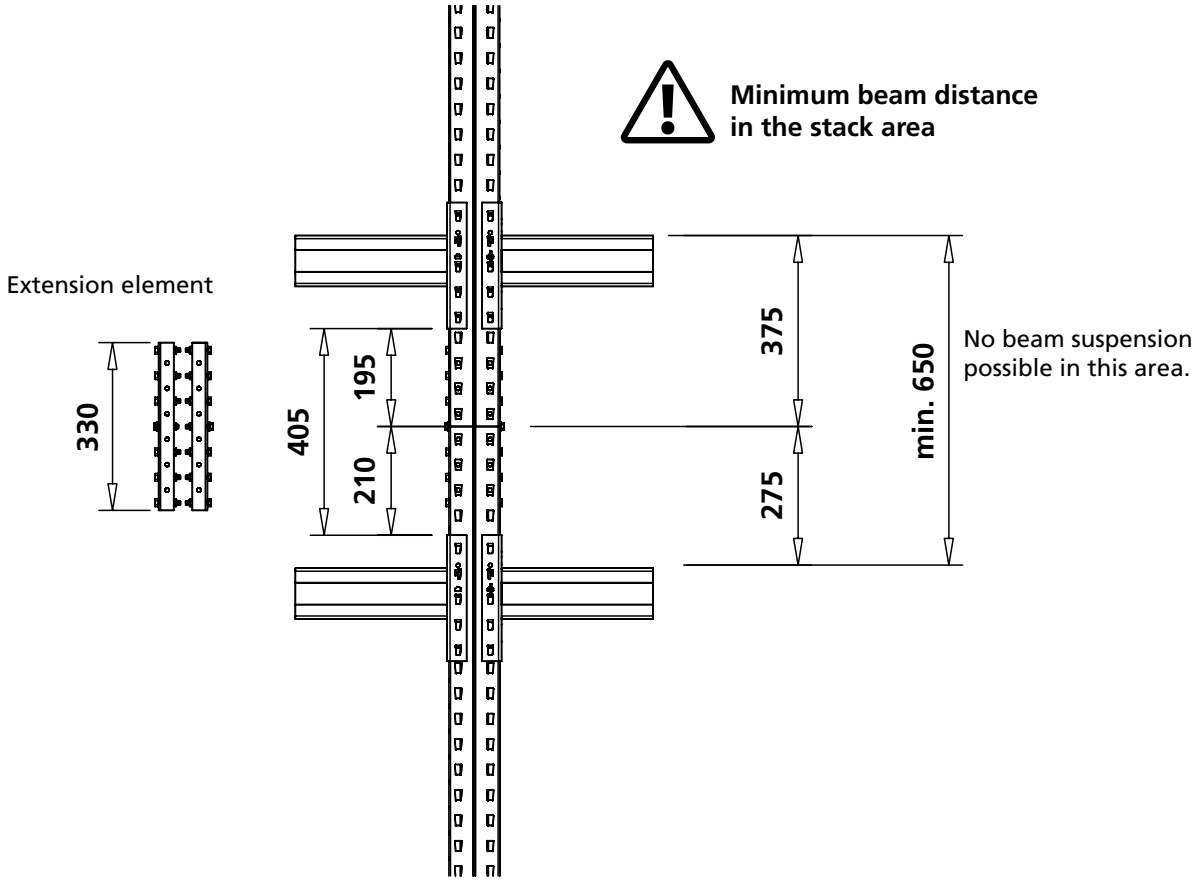

Trestle shelving: pallet racking with one beam level

Pallet racking systems with one beam level, e.g. for storage of Big Packs or IBC Container (Tanks).

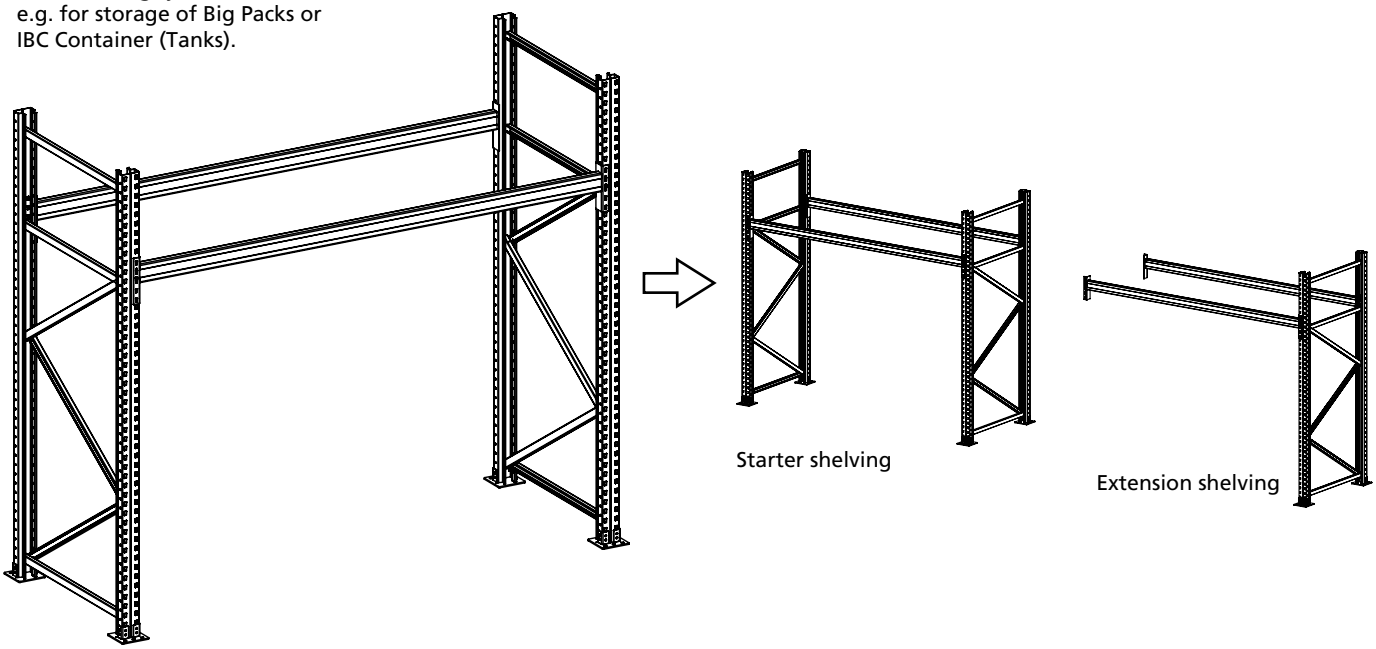

Frame assembly according to page 12 and 13!

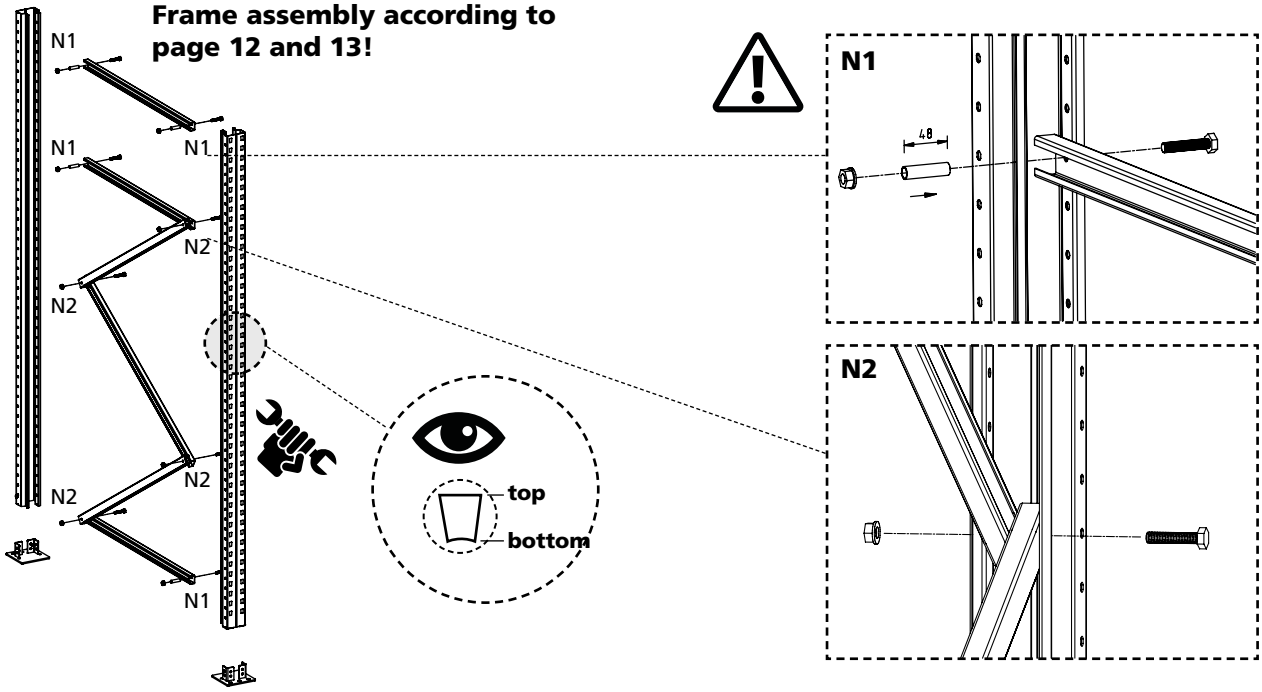

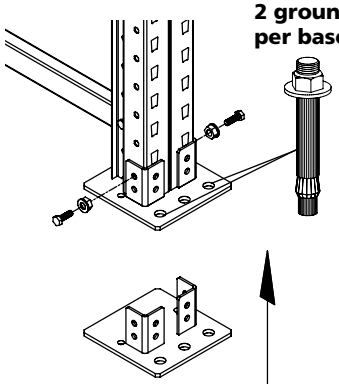

2 ground anchors per base plate!

Ground anchoring is always necessary. For pallet shelving, please use 2 pcs. ground anchor M12x110 mm, Art. No. 46699 for each base plate. Drill the holes through the base plates into the ground, insert the anchors and tighten them with the specified torque. The anchors must grip in the concrete.

Drill bit Ø 12 mm drill depth 120 mm

The requirements for the base plate can be found on page 3, item 10. In case of deviations, please consult SCHULTE Lagertechnik.

Installation of locking pins

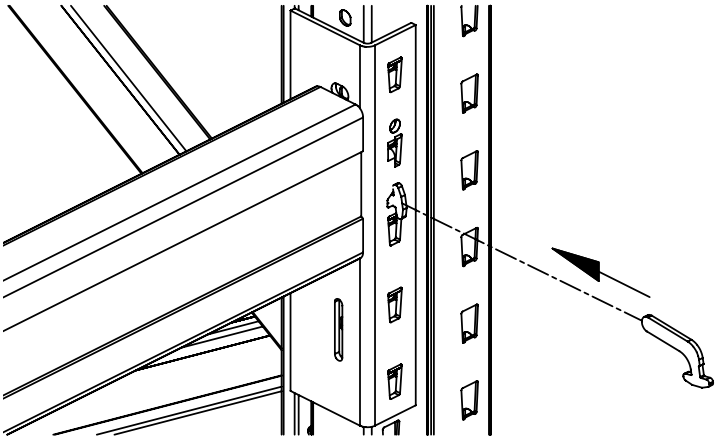

Important: insert the supplied LOCKING PINS!

Trestle shelving / load data / range overview

Frame depth mm	Height storage level mm	Frame height mm	Frame type	Beam length mm	Number of pallets	Beam type	Pallet weight kg	Load Beam level kg
800	1500 2000 2500	2000 2500 3000	S 625-A18	1350	1	EGN 100x50x1.5	500	500
							800	800
							1000	1000
			S 625-A18	1825	2	EGN 120x50x1.5	500	1000
							800	1600
							1000	2000
			S 625-A18	2700	3	EGN 120x50x1.5	500	1500
						EGN 150x50x1.5	800	2400
							1000	3000
1100	1500 2000 2500	2000 2500 3000	S 625-A18	1350	1	EGN 100x50x1.5	500	500
							800	800
							1000	1000
			S 625-A18	1825	2	EGN 120x50x1.5	500	1000
							800	1600
							1000	2000
			S 625-A18	2700	3	EGN 120x50x1.5	500	1500
						EGN 150x50x1.5	800	2400
							1000	3000
			S 625-A18	3300	3	EGN 150x50x1.5	500	1500
						EGN 165x50x1.8	800	2400
							1000	3000
			S 625-A18	3600	4	EGN 165x50x1.8	500	2000

Pallet shelving: 3-upright frames

Assembly of 3-upright frames

3-upright frames are a variant of pallet racking, which can be used as an economical alternative to conventional shelving structures in some cases with lower loads on special or large pallets.

Load values on request.

Important notice:
Permissible bay and beam loads are notincreased with this design!

The centre beam support must always be statically checked in house. Otherwise, this may lead to undesirable overloads.

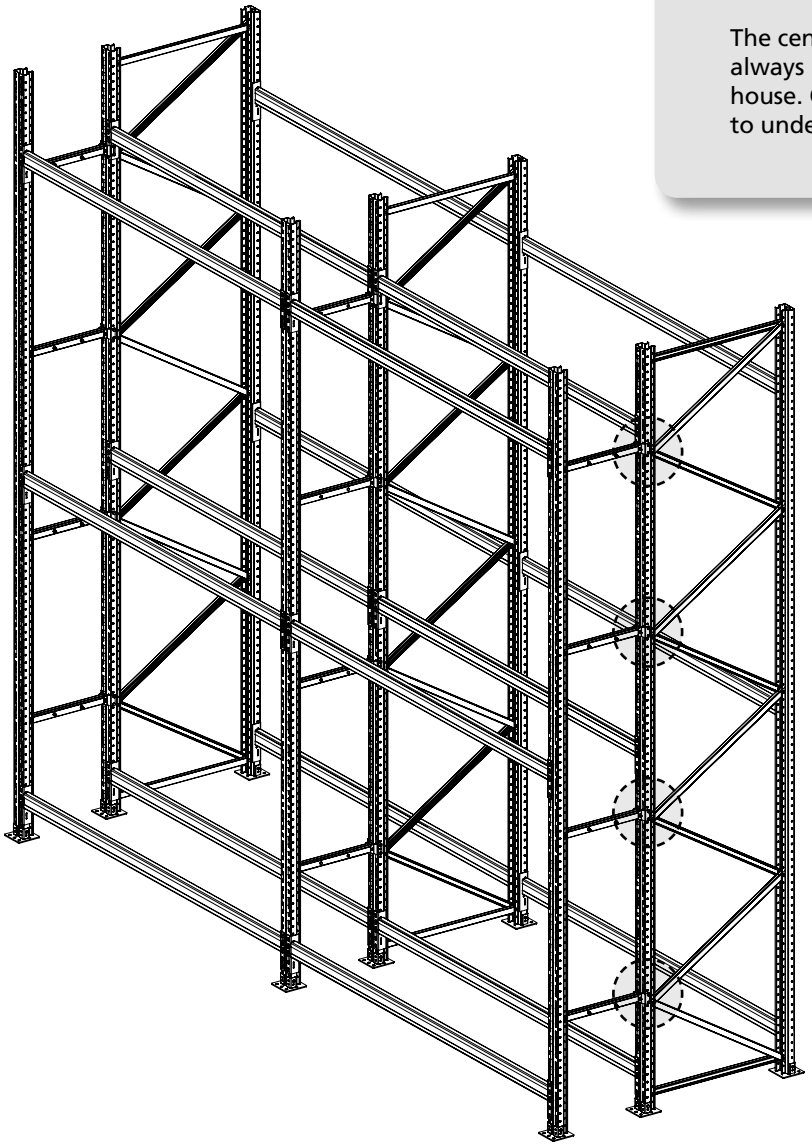

Assembly of profile storage shelving

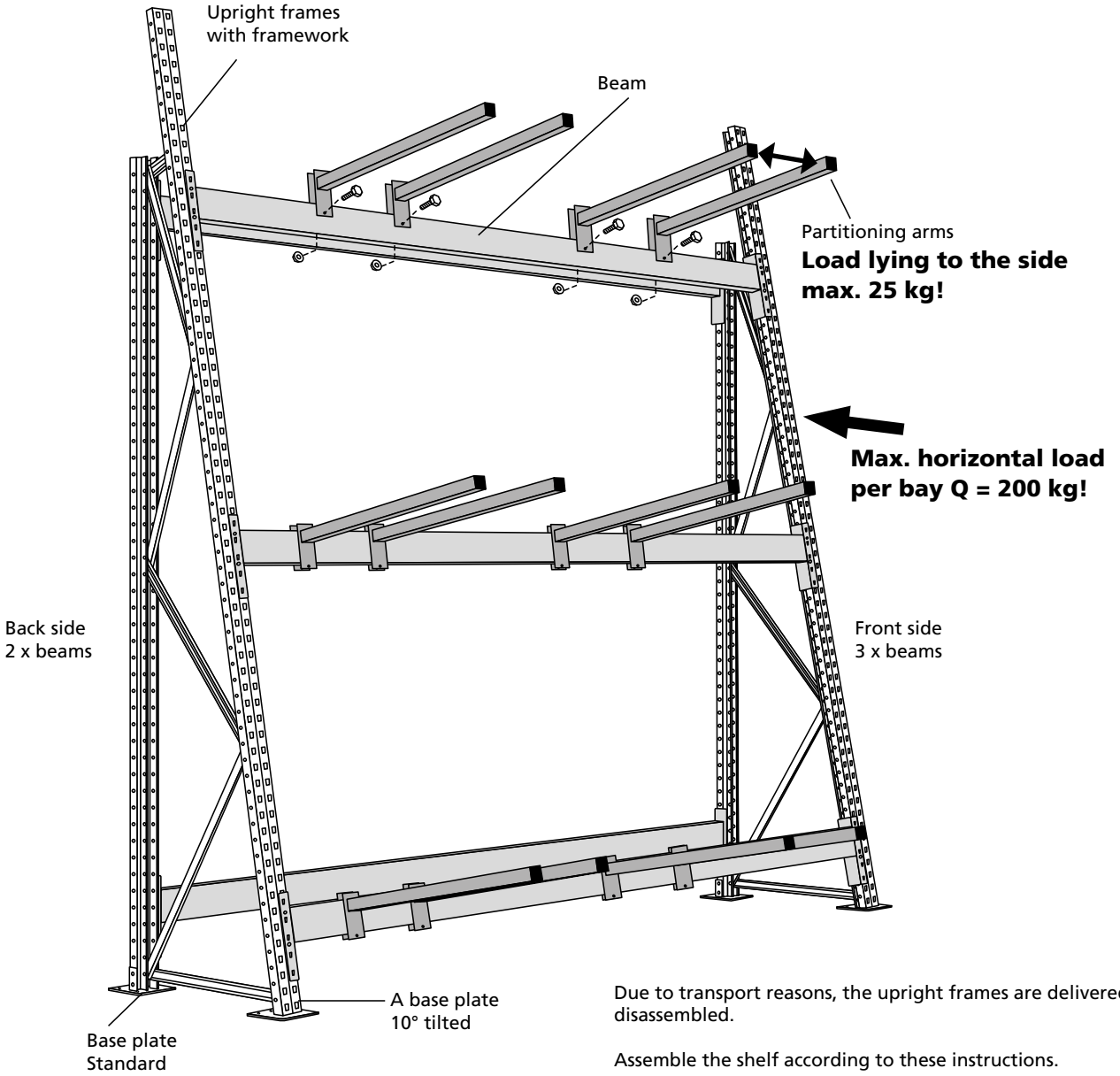

Due to transport reasons, the upright frames are delivered disassembled.

Assemble the shelf according to these instructions.

Hook in the beams and insert the locking pins.

Then insert the partitioning arms onto the beams and bolt them together.

The upright frames must be anchored to the base plate with ground anchors to prevent tipping.
2 ground anchors per base plate.

Beam suspension: 3 beams at the front, 2 beams at the back

Assembly of upright frames

Structure of the upright frame

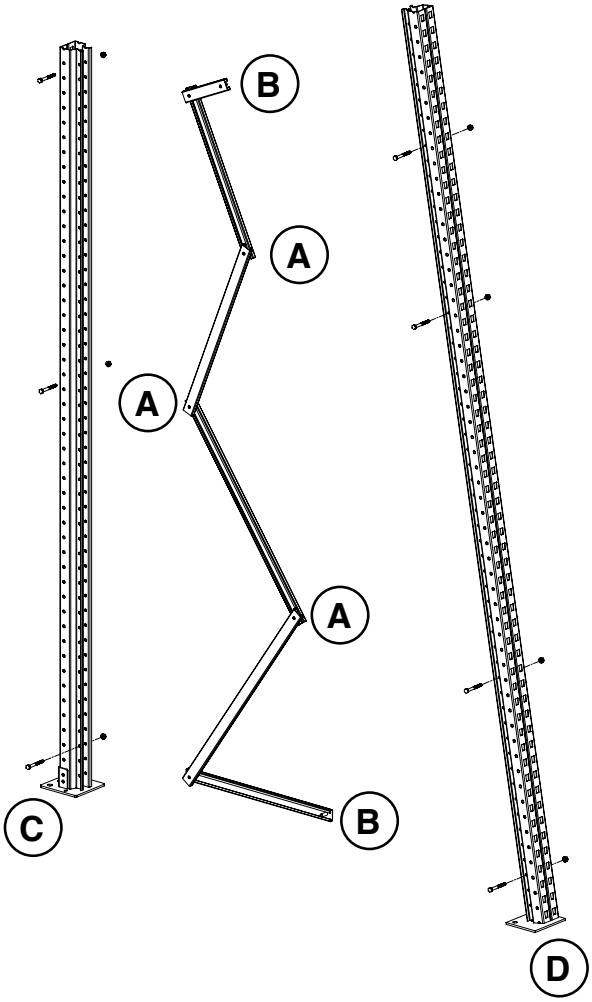

Dimensions of the upright frame

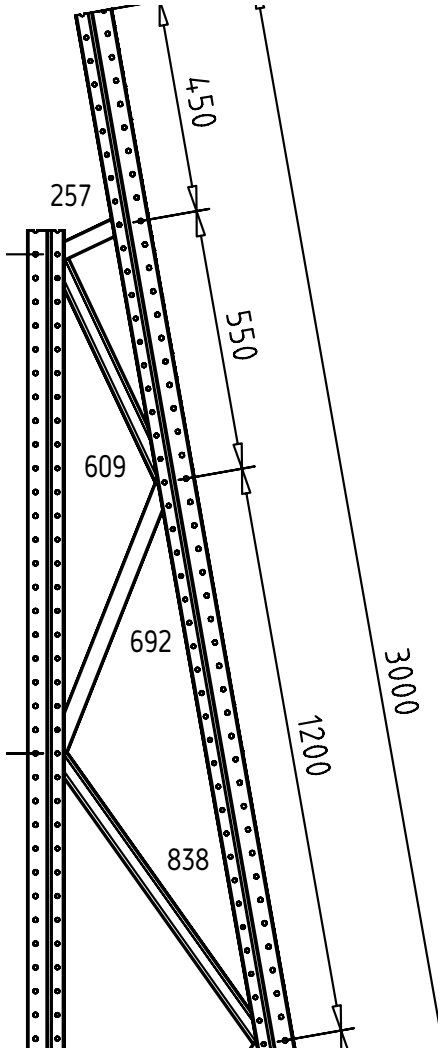

Base plates

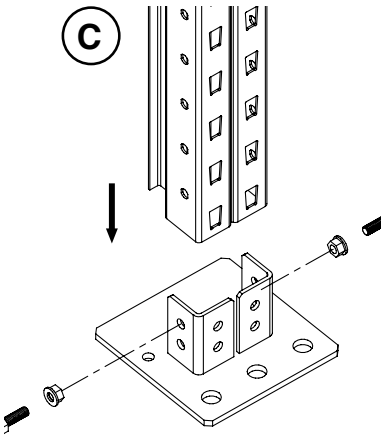

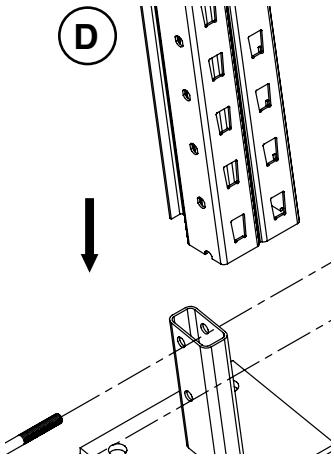

Standard base plate
Bolt connection:
2x bolts M8x25 DIN 933
2 x collar nuts M8 DIN 6923

A base plate 10° tilted
Bolt connection:
2x bolts M8x50 DIN 933
2 x collar nuts M8 DIN 6923

Framework

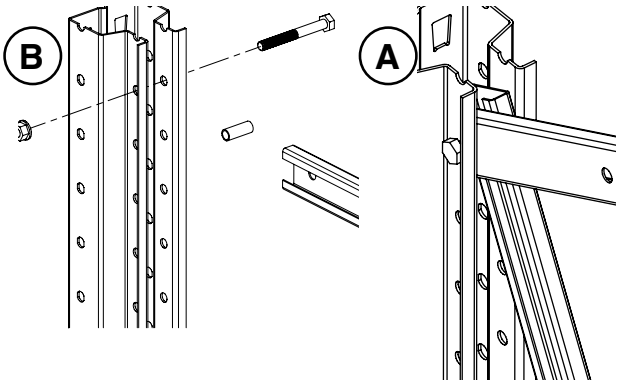

For bolting **horizontal** and **diagonal** (framework), see Page 7 of these instructions.

Installation of locking pins

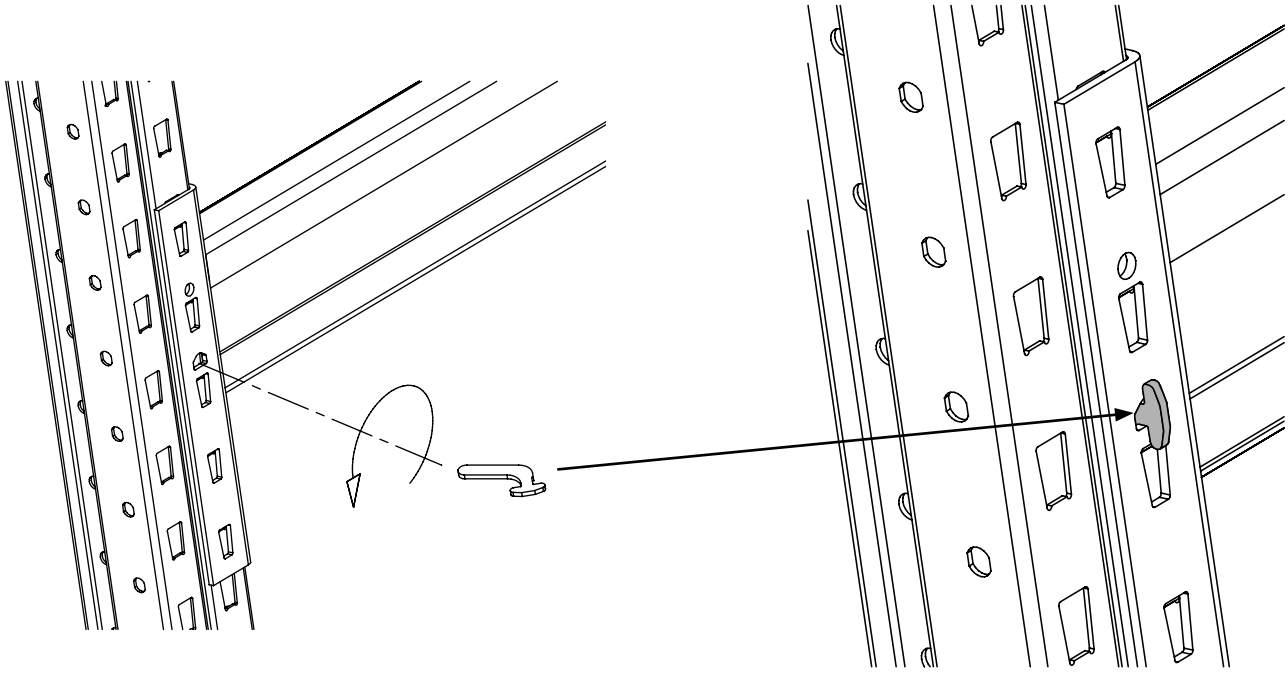

Assembly of partitioning arms

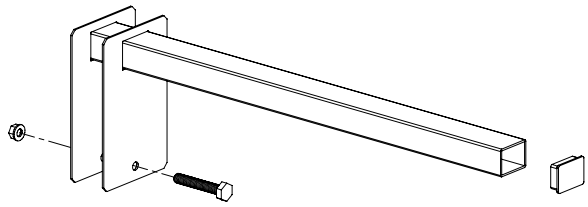

Insert partitioning arm, plastic plug 40x30.
Bolt connection:
1 x bolt M8x70 DIN 931
1 x collar nut M8 DIN 6923

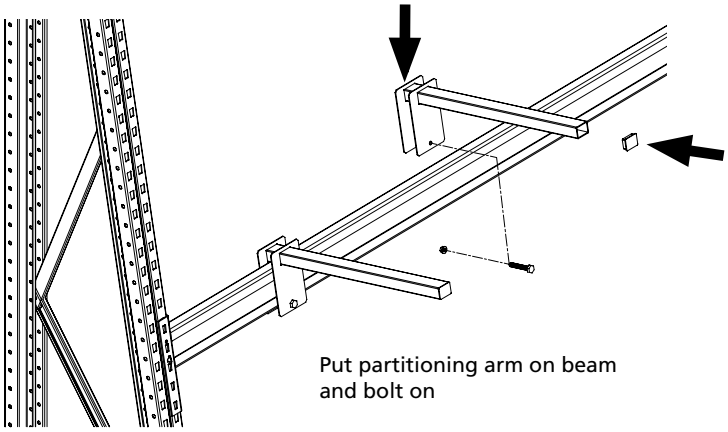

Put partitioning arm on beam
and bolt on

Ground anchoring

Standard base plate

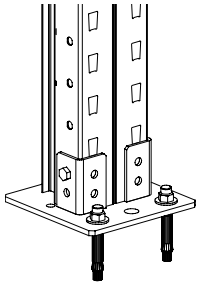

Ground anchoring
per base plate
2 x ground anchor M12 (Art. No. 46699)

A-base plate
10° tilted

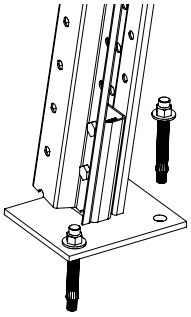

Ground anchoring
per base plate
2 x ground anchor M12 (Art. No. 46699)

The requirements for the base plate can be found on page 3, item 10.
In case of deviations, please consult SCHULTE Lagertechnik.

Cable drum shelving system

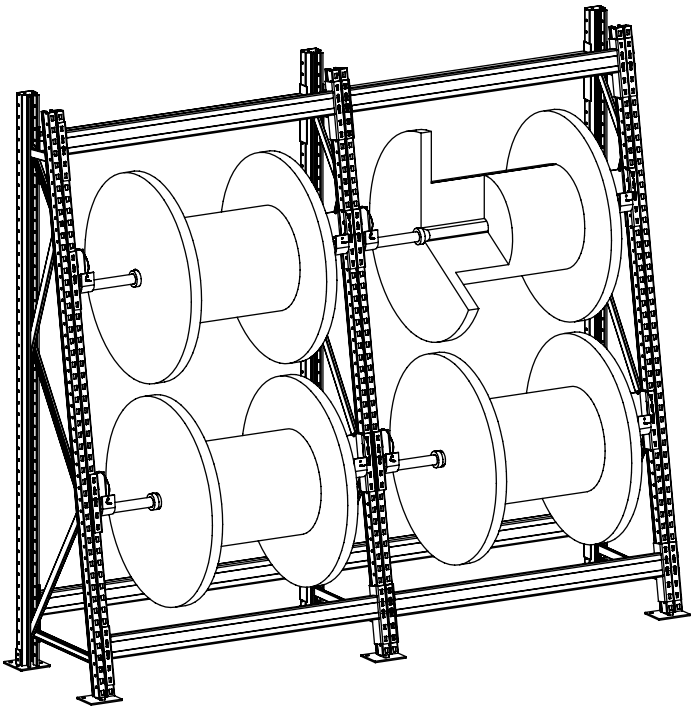

Slanted roller system

for light up to medium heavy cable drums

The slanted roller shelving model is a manually operated lighter rolling storage system with an inclination of 10° on one side.

It enables individual use of winding light to medium cable drum sizes up to a drum size of 500 kg.

Maximum bay loads of up to 2,250 kg are possible with this system.

The design of the system is non-braked, which is not suitable for mechanical cable rolling techniques.

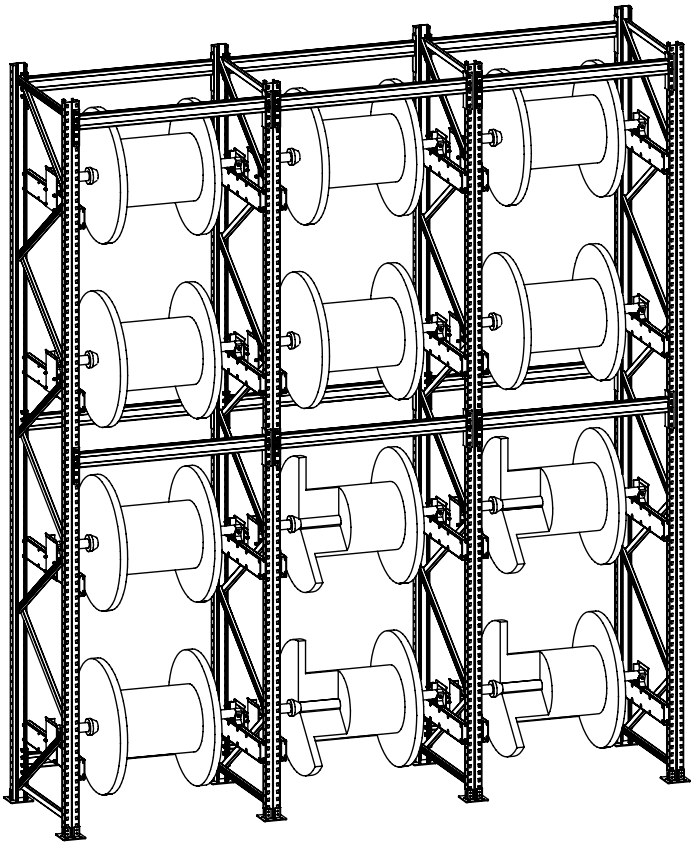

BlockRoll System

for medium to heavy cable drums

The descender system is suitable for storing medium to heavy cable drums up to a drum weight of 2,000 kg. In this variant, the shelving uprights have a straight design.

This bearing system is available in the **BlockRoll type HB** design with braked drum axle mounts with replaceable brake pads.

Maximum bay loads of up to 6,000 kg are possible with this system.

The HB construction is suitable for mechanically driven cable winding and unwinding machines.

For further comprehensive technical information, please refer to our installation and usage instructions Art. No. 13075

Assembly limit deviations, source: Extract from DIN EN 15620

The maximum permissible limit deviations after assembly with unloaded shelving must be as shown in Table 2 and Table 3 and Figure 9.
ANMERKUNG: The assembly limit deviations also apply if the shelving is dismantled and then reassembled.

Table 2 - Limit deviations, measured in horizontal direction

Limit values for the horizontal limit deviations in the XZ plane mm		
Measurement specification and description of the limit deviation		**Assembly limit deviations for shelving class 400**
∂A	Deviation from the nominal dimension for clear access width between two supports at any beam height	±3
∂A_t	Deviation from the nominal dimension for the total length of the shelf, cumulative for the number "n" of bays, measured approximately at ground level	±3n
∂B_0	Deviation from the nominal dimension of the shelf front related to the respective "reference line of the shelving system Z", measured approximately at ground level	±10
BF	Misalignment of opposite shelving supports transverse to the frame	±20
C_x	Deviation of the frame from the perpendicular in X-direction	± H/350
C_z	Deviation of the frame from the perpendicular in Z-direction	± H/350
∂D	Deviation from nominal dimension for shelf depth (single frame)	±6
∂E	Deviation from nominal dimension for aisle width approximately at ground level	±15
∂F	Deviation from the nominal dimension for aisle straightness, measured approximately at ground level with reference to the "reference line X of the aisle system"	±15
G_z	Straightness of the beam in Z-direction	±4/400
		The larger of the following limit deviation values applies:
J_x	Straightness of supports in X-direction between beams placed at distance HB from each other	± 3 or ± HB/400
J_z	Initial curvature of an upright frame in Z-direction	±H/500
T_w	Beam torsion in the centre of the bay	1° per m

Table 3 - Limit deviations, measured in vertical direction

Limit values for the vertical limit deviations in the Y direction mm		
Measurement specification and description of the limit deviation		**Assembly limit deviations for shelving class 400**
		The larger of the following limit deviation values applies:
Gy	Straightness of the support in Y-direction	± 3 or + A/500
∂H_{1A}	Deviation of the top of the lower beam level in relation to the base plate	±10
∂H_1	Deviation of the upper side of the beam level H_1 compared to the base plate level	± 5 or ± H_1/500
H_y	Deviation of the heights of the pallet pick-up points between the front and rear beams in a shelf	±10

NOTE: When recording the shelving dimensions, the limit deviations and clearances of the shelving are generally measured before loading. The deviation limits given in this European Standard may not be applicable to loaded shelving.

Assembly limit deviations, source: Extract from DIN EN 15620

Shelf dimension recordings may be completed if required by individual contracts (see Appendix C).

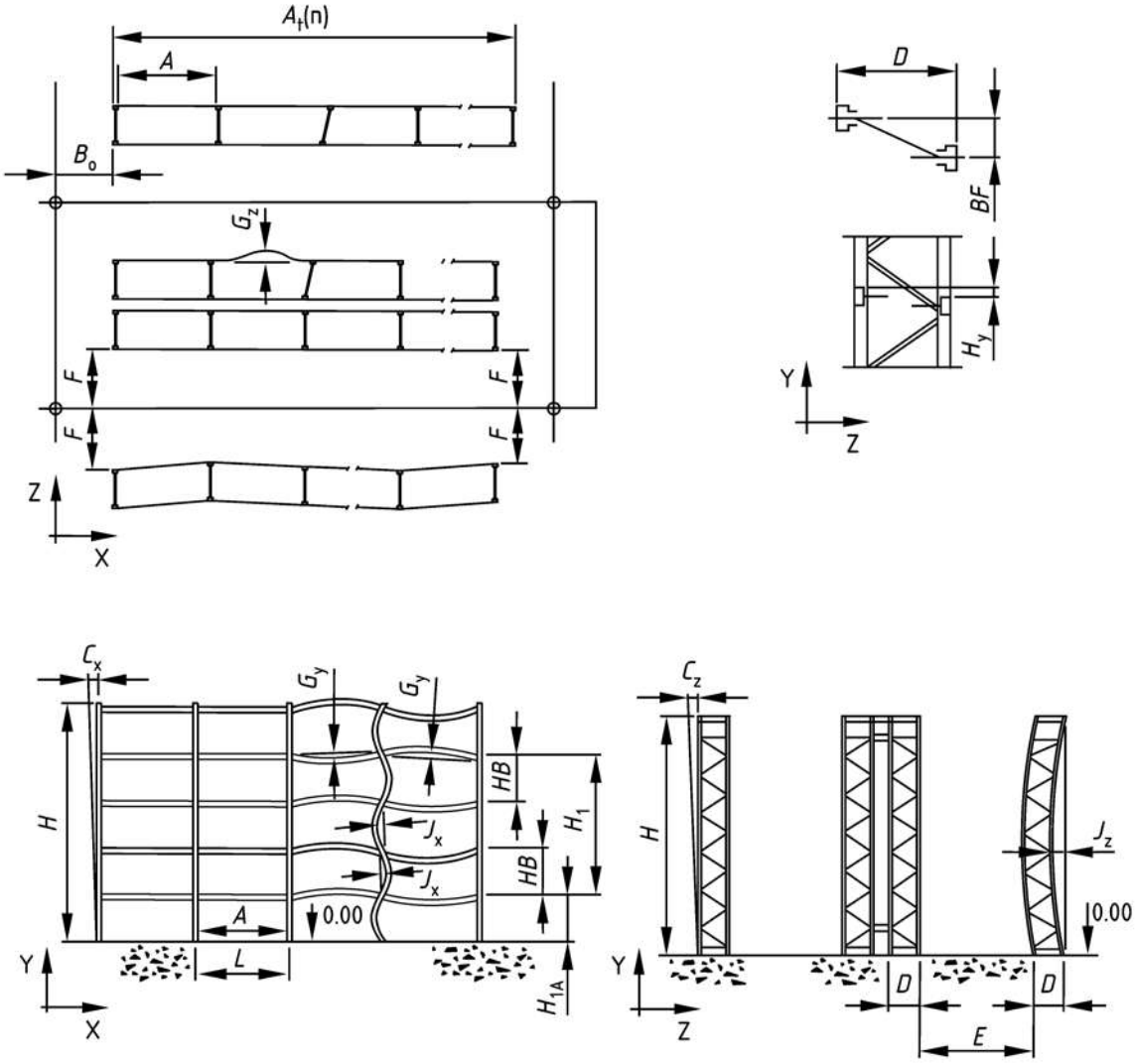

Legend

A	clear access width between two supports
B_0	Distance between reference line of shelving system Z and the front of the shelving
BF	Misalignment of opposite shelving supports transverse to the frame
C_z C_x	Deviation of the frame from the perpendicular in the Z or X direction
D	Shelf depth (single frame)
E	Aisle width
F	Distance between reference line X of the aisle system and front side of the shelf support
G_zG_y	Straightness of the beam in Z or Y direction
H	Height from the top of the base plate level to the top of the shelf support
HB	Height from the top of the panel level to the next higher panel level
H_y	Deviation of the heights of the pallet pick-up points between the front and rear beams in a shelf
H_{1A}	Height from the top of the lower beam level to the top of the base plate level
H_1	Height from the top of the base plate level to any other plate level
J_z	Straightness of the supports in X-direction between adjacent beams
J_z	Initial curvature of an upright frame in Z-direction
L	Distance from the centre to the centre of the shelf supports

Figure 9 — Horizontal and vertical limit deviations

Assembly limit deviations, source: Extract from DIN EN 15620

GENERAL: The maximum permissible limit deviations for unloaded shelving after the installation of the system must comply with Table 7 and Table 8 as well as Figure 18.

NOTE: The assembly limit deviations, deformations and clearances also apply when the shelving is dismantled and reassembled.

Table 7 - Limit deviations, measured in horizontal direction

Horizontal limit deviations for the X Z-level mm		
Measurement specification and description of the limit deviation		**Assembly limit deviations for shelving class 300**
∂A	Deviation from the nominal dimension for clear access width between two supports at any beam height	±3
∂A_t	Deviation from the nominal dimension for the total length of the shelf, cumulative for the number "n" of bays, measured as close as possible to the base plate	± 3N
		The larger of the following limit values applies
B	Misalignment of the supports in the aisle cross direction, cumulative for the number "n" of bays, measured approximately at ground level. For class 300A this only applies to the aisle supports. For class 300B this applies to the aisle supports and the rear supports.	±10 or for class 300A: ±1.0n for class 300B: ±0.5n
∂B_0	Deviation from the nominal dimension of the shelf front at the transfer point end, related to the respective "reference line of the shelving system Z", measured approximately at ground level	±10
C_x	Deviation of the frame from the perpendicular in X-direction	± H/500
C_z	Deviation of the frame from the perpendicular in Z-direction	without fixed lift: +H/500 with fixed lift: ±H/750[a]
∂D	Deviation from nominal dimension for shelf depth (single or double frame)	Single frame: ± 3 Double frame: ± 6 mm
∂E	Deviation from nominal dimension for aisle width approximately at ground level	±5
∂E_1	Deviation from the nominal dimension for the width between the guide rails	+5 0
∂E_2	Deviation between the supports on one side of the guide rail	±5
∂F	Deviation from the nominal dimension for the aisle straightness, measured approximately at ground level with reference to the "reference line of the aisle system X" or according to the specifications of the supplier of the fork-lift	±10
F_1	Deviation between adjacent supports, measured approximately at ground level in the Z-direction	±5
G_z	Straightness of the beam in Z-direction	±.4/400
		The larger of the following limit values applies
J_x	Straightness of supports in X-direction between beams spaced at a distance HB from each other	±3 or ±ÄB/750
J_z	Initial curvature of an upright frame in Z-direction	± H/500
∂M	Limit deviation for the upper guide rail	Determined by the specification author or the forklift manufacturer.
T_w	Beam torsion in the centre of the bay	1° per m
[a] H/500 is also permitted provided the projection of the pallet runners or blocks over the front beam is 75 mm or more and the runners or blocks are supported by beams.		

Assembly limit deviations, source: Extract from DIN EN 15620

Table 8 - Limit deviations, measured in vertical direction

Vertical limit deviations in the Y direction mm		
Measurement specification and description of the limit deviation		**Assembly limit deviations for shelving class 300**
		The larger of the following limit values applies:
G_y	Straightness of the beam in Y-direction	± 3 or ±A/500
∂H_1	Deviation of the upper edge height of any beam above the lower beam height	300A: ± 5 or ± H_1/500 300B: ± 3 or ± H_1/1 000
∂H_{1A}	Deviation of the upper edge of the lower beam at each support from ground level	±7
∂H_3	Limit deviation for the upper guide rail, if present	If available, determined by supplier or forklift manufacturer
H_y	Deviation of the pick-up heights of the load units between the front and rear beams in a shelf	±10

NOTE 1: Shelving dimensions can be recorded to measure the assembly limit deviations before the shelf is loaded. The deviation limits given in this European Standard may not be applicable to loaded shelving. Shelf dimension recordings may be carried out if required by individual contracts (see Appendix C).

NOTE 2: The individual clearances given in this document are minimum values. The designer is responsible for determining the clearances of the overall system using the clearances and limit deviations specified in this document. If larger clearances are required, these should be specified by the forklift supplier or the designer (see Appendix F).

NOTE 3: The designer should determine whether it is necessary to consider all worst case limit values or whether it is possible to deviate from the figures given in this document for technical or economic reasons, provided that the functionality of the overall system can be guaranteed (see Annex G).

Assembly limit deviations, source: Extract from DIN EN 15620

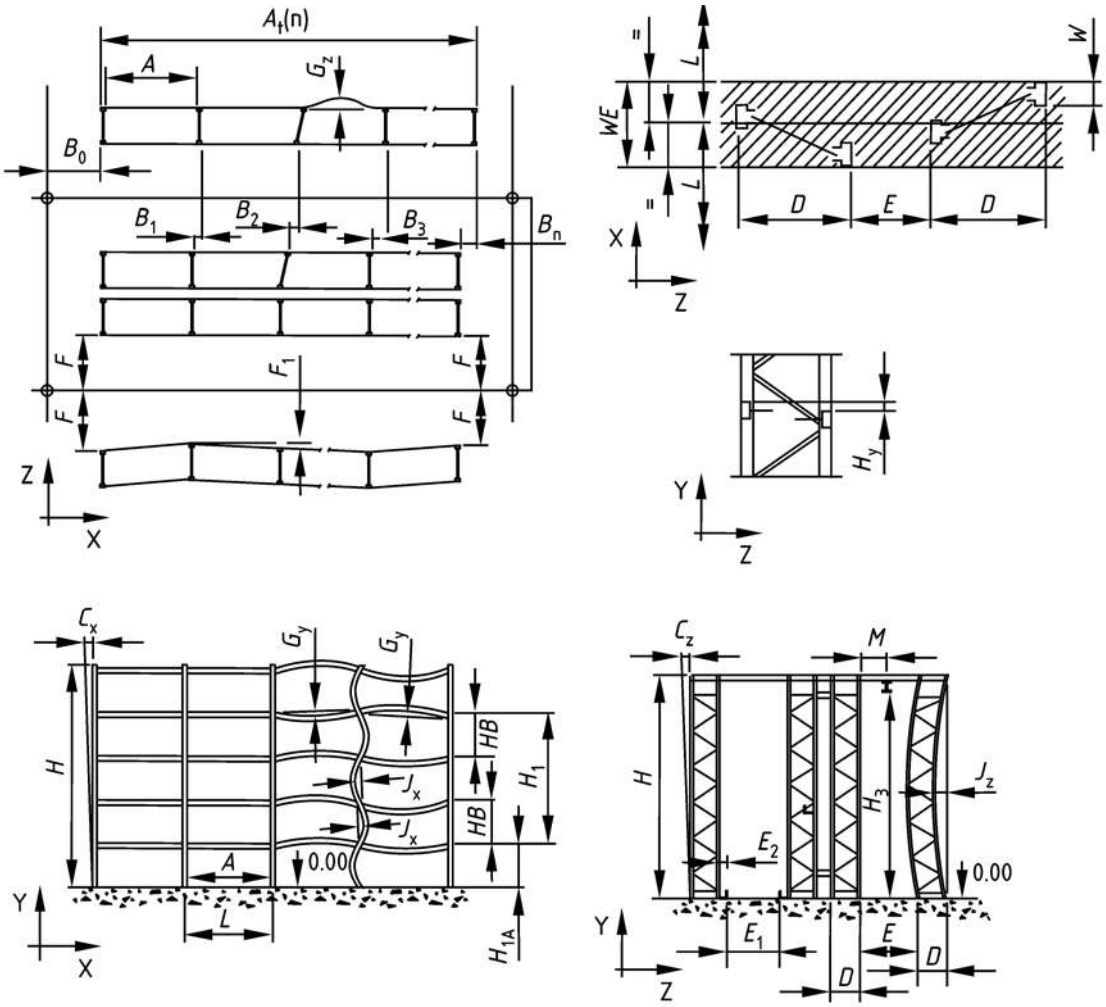

Legend

A	clear access width between two supports
B_0	Distance between reference line of shelving system Z and the front of the shelving
B_1, B_2	Misalignment of the supports in the aisle cross direction into bays 1 or 2
C_z, C_x	Deviation of the frame from the perpendicular in the Z or X direction
D	Shelf depth (single frame)
E	Aisle width
E_1	Distance between guide rails
E_2	Distance between guide rails and front side of the shelf support
F	Distance between reference line X of the aisle system and front side of the shelf support
F_1	Deviation between adjacent supports, measured approximately at ground level in the Z-direction
G_z ,G_y	Straightness of the beam in Z or Y direction
H	Height from the top of the base plate level to the top of the shelf support
HB	Height from the top of the panel level to the next higher panel level
H_y	Deviation of the heights of the pallet pick-up points between the front and rear beams in a shelf
H_{1A}	Height from the top of the lower beam level to the top of the base plate level
H_1	Height from the top of the base plate level to any other plate level
J_x	Straightness of the supports in X-direction between adjacent beams
J_z	Initial curvature of an upright frame in Z-direction
L	Distance from the centre to the centre of the shelf supports
M	Distance from the front of the shelf support to the top edge of the guide rail

Figure 18 - Limit deviations in horizontal and vertical direction

Keywords glossary

Your notes

Your notes

lieber.logisch.lagern

SCHULTE Lagertechnik

Assembly and usage instructions

Pallet racking

Art. No. 13048-EN

Version 1.0 / 01.2021